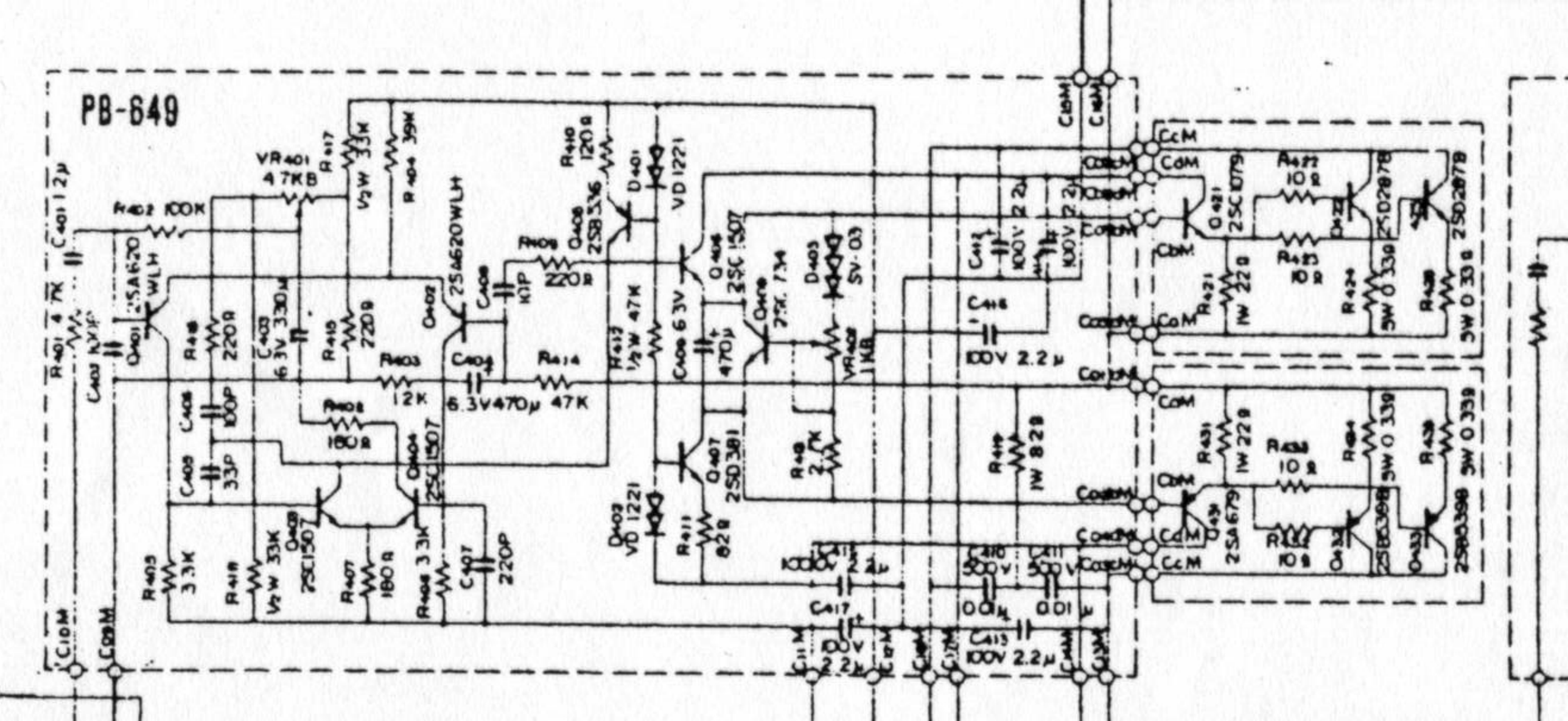
PB-649
R401 4.7K
C401 1.2μ
R402 100K
VR401 4.7KB
R417 1/2W 33K
R404 39K
R410 120Ω
D401 VD1221
Q408 2SB336
R409 220Ω
Q406 2SC1507
Q402 2SA620WLH
C408 10P
C403 6.3V 330μ
R418 220Ω
R415 220Ω
R403 12K
C404 6.3V470μ
R414 47K
R412 1/2W 47K
C409 6.3V 470μ
Q409 2SC734
D403 5V-03
VR402 1KB
C412 100V 2.2μ
C416 100V 2.2μ
R419 1W 82Ω
R410 2.7K
Q407 2SD381
R411 82Ω
D402 VD1221
C406 100P
C405 33P
R402 180Ω
Q404 2SC1507
Q403 2SC1507
R405 3.3K
R416 1/2W 33K
R407 180Ω
R406 3.3K
C407 220P
C415 1000V 2.2μ
C417 100V 2.2μ
C410 500V 0.01μ
C411 500V 0.01μ
C413 100V 2.2μ
C10M
C09M
C11M
C12M
C13M
C14M
C15M
C16M
CcM
CdM
CbM
CaM
Q421 2SC1079
R422 10Ω
R423 10Ω
R421 1W 22Ω
R424 5W 0.33Ω
R428 5W 0.33Ω
Q422 2SD2878
Q423 2SD2878
R431 1W 22Ω
R433 10Ω
R434 5W 0.33Ω
R438 5W 0.33Ω
Q431 2SA679
R432 10Ω
Q432 2SB539B
Q433 2SB539B