DVD Mini System

FWD792/55/98

Service
Service
Service

Service Manual

TABLE OF CONTENTS

	Page
Location of PC Boards	1-2
Speci cations	1-3
Measurement Setup	1-4
Service Aids, Safety Instruction, etc	1-5 to 1-7
Connections & Functional Overview	1-8 to 1-11
Troubleshooting	1-12 to 1-13
Repair Instructions	2
Disassembly Instructions & Service positions	3
Set Block Diagram	4-1
Set Wiring Diagram	4-2
Control Board	5
Main Board	6
Tuner Board	7
Power Board	8
Mechanical Exploded View & Parts List	9

CLASS 1
LASER PRODUCT

© Copyright 2006 Philips Consumer Electronics B.V. Eindhoven, The Netherlands
All rights reserved. No part of this publication may be reproduced, stored in a retrieval system or transmitted, in any form or by any means, electronic, mechanical, photocopying, or otherwise without the prior permission of Philips.

Published by SL 0623 Service Audio Printed in The Netherlands Subject to modification

GB 3141 785 30880

Version 1.0

PHILIPS

LOCATION OF PC BOARDS

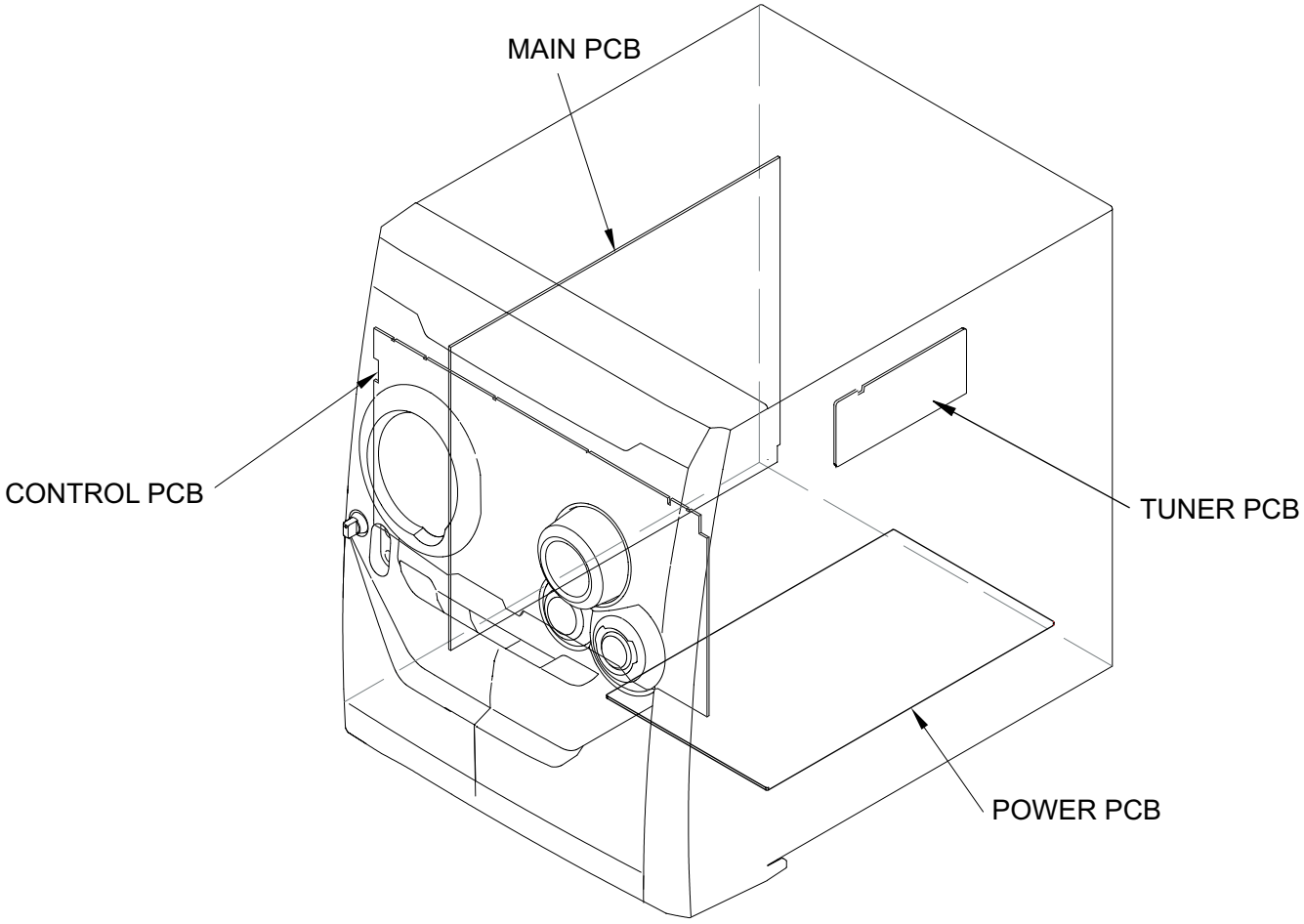

Specifications

AMPLIFIER SECTION

Output power ..... 4600 W PMPO
Stereo mode ..... 2x175 W RMS
Frequency Response ..... 180 Hz - 16 kHz / ± 3 dB
Signal-to-Noise Ratio ..... > 60dB (A-weighted)
Input Sensitivity
AUX/TV In ..... 500 mV
Output Sensitivity
Headphone ..... 1000 mV ± 2dB mV
Line Out ..... 450 mV – 550 mV

TUNER SECTION

Tuning Range .....
..... FM 87.5 – 108 MHz (50 kHz steps)
..... MW 531 – 1602 kHz (9 kHz steps)
..... MW 530 – 1710 kHz (10 kHz steps)
Signal-to-Noise Ratio ..... FM ≥ 55 dB
..... MW ≥ 35 dB

TAPE SECTION

Frequency Response
Normal tape (type 1) ..... 125Hz-8 Kz
Signal-to-Noise Ratio
Normal tape (type 1) ..... ≥ 45 dBA
Wow and flutter ..... ≤ 0.35%

DVD SECTION
Laser Type ..... Semiconductor
Disc Diameter ..... 12cm / 8cm
Video Decoding ..... MPEG-2 / MPEG-1
Video DAC ..... 10 Bits
Signal System ..... PAL / NTSC
Video Format ..... 4:3 / 16:9
Video S/N ..... 56 dB (minimum)
Composite Video Output ..... 1.0 Vp-p, 75 Ω
S-Video Output ..... Y - 0.714 Vp-p, 75 Ω
..... C - 0.286 Vp-p, 75 Ω
Audio DAC ..... 24 Bits / 96 kHz
Frequency Response ..... 4 Hz - 20 kHz (44.1kHz)
..... 4 Hz - 22 kHz (48kHz)
..... 4 Hz - 44 kHz (96kHz)

MAIN UNIT

Power Supply Rating ..... 110 - 127 / 220 - 240 V
..... 50/60HZ Switchable
Power Consumption
Active ..... 85 W
Standby ..... <10 W
Dimensions (w x h x d) ..... 265x 310 x 367 (mm)
Weight ..... 5.52 kg
Packaging Dimensions (w x h x d) .....
..... 611.4 x 524 x 522 (mm)
Gross weight 28Kg

SPEAKERS

Front speakers
System ..... 3-way, Bass reflex
Impedance ..... 2 Ω
Speaker drivers ..... 6.5” woofer,
..... 2” tweeter
Frequency response ..... 50 Hz – 20 kHz
Dimensions (w x h x d) .....
..... 234 x 455 x 240 (mm)
Weight 6.52kg/each

Specifications and external appearance are subject to change without notice.

MEASUREMENT SETUP

Tuner FM

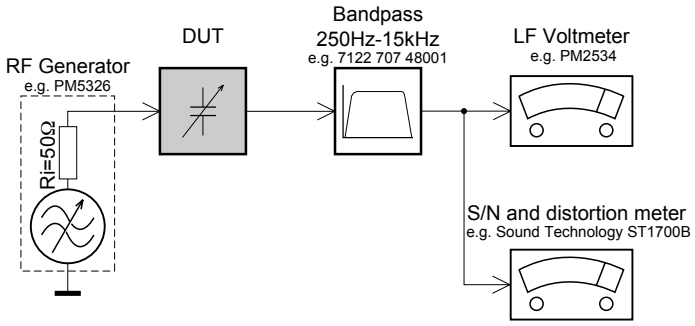

Use a bandpass filter to eliminate hum (50Hz, 100Hz) and disturbance from the pilottone (19kHz, 38kHz).

Tuner AM (MW,LW)

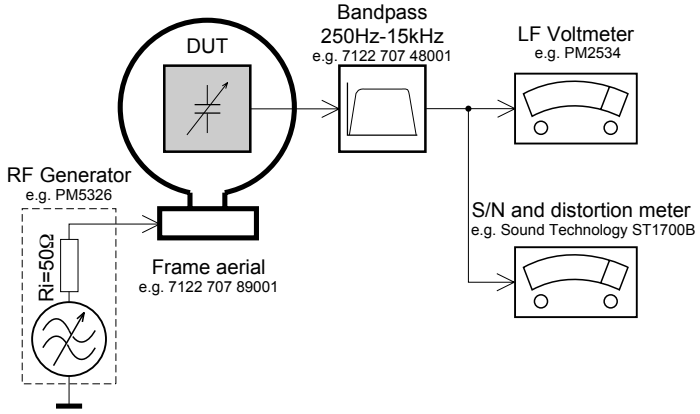

To avoid atmospheric interference all AM-measurements have to be carried out in a Faraday´s cage.
Use a bandpass filter (or at least a high pass filter with 250Hz) to eliminate hum (50Hz, 100Hz).

CD

Use Audio Signal Disc SBC429 4822 397 30184
(replaces test disc 3)

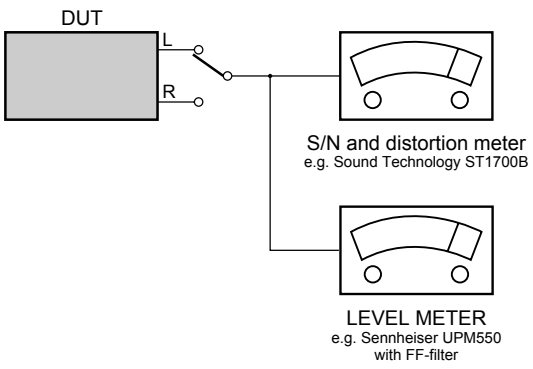

Recorder

Use Universal Test Cassette **CrO2** SBC419 4822 397 30069
or Universal Test Cassette **Fe** SBC420 4822 397 30071

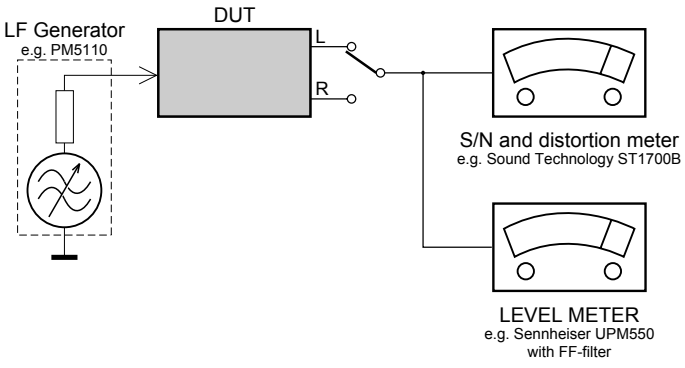

SERVICE AIDS

Service Tools:

Universal Torx driver holder 4822 395 91019
Torx bit T10 150mm 4822 395 50456
Torx driver set T6-T20 .....4822 395 50145
Torx driver T10 extended 4822 395 50423

Compact Disc:

SBC426/426A Test disc 5 + 5A 4822 397 30096
SBC442 Audio Burn-in test disc 1kHz 4822 397 30155
SBC429 Audio Signals disc 4822 397 30184
Dolby Pro-logic Test Disc 4822 395 10216

ESD Equipment:

Anti-static table mat - large 1200x650x1.25mm ...4822 466 10953
anti-static table mat - small 600x650x1.25mm 4822 466 10958
Anti-static wristband 4822 395 10223
Connectorbox (1MΩ) 4822 395 11307
Extension cable
(to connect wristband to conn.box) 4822 320 11305
Connecting cable
(to connect table mat to conn.box) 4822 320 11306
Earth cable (to Connect product to mat or box) --4822 320 11308
Complete kit ESD3
(combining all above products) 4822 320 10671
Wristband tester 4822 344 13999

HANDLING CHIP COMPONENTS

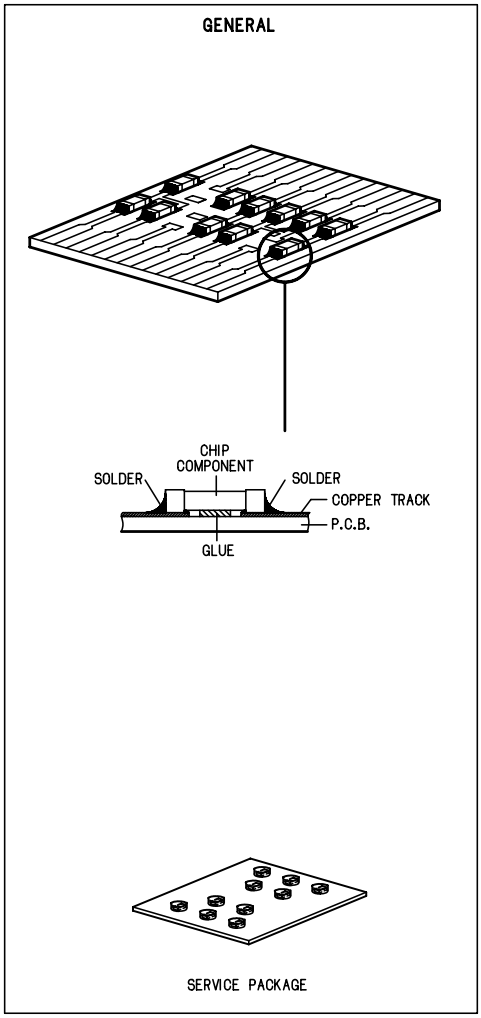

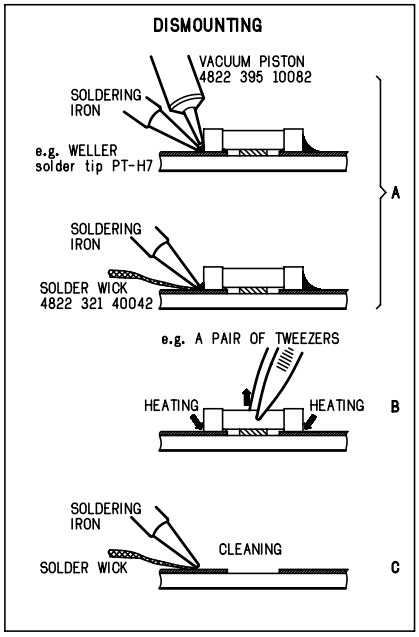

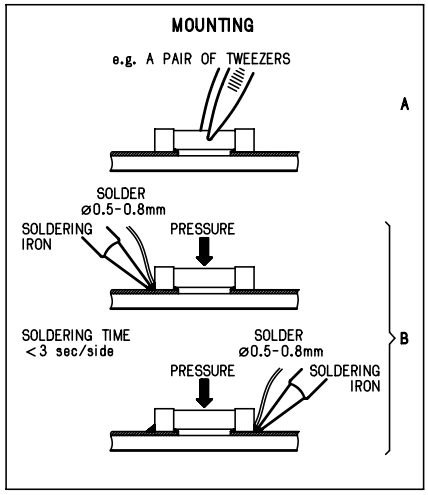

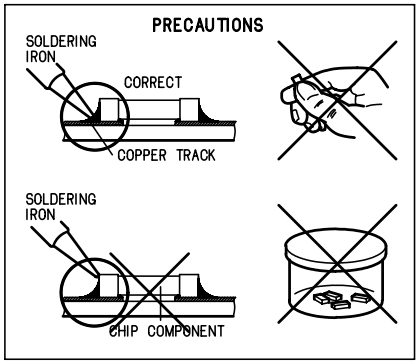

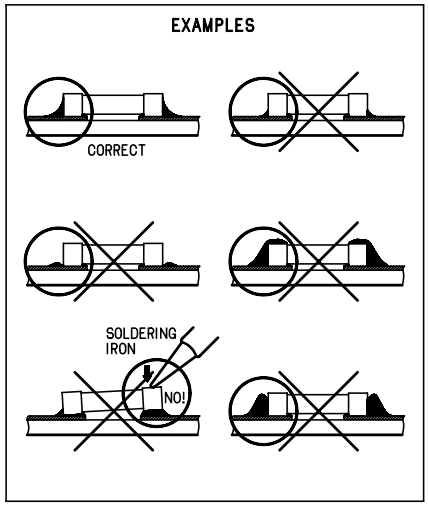

ESD

GB WARNING

All ICs and many other semi-conductors are susceptible to electrostatic discharges (ESD). Careless handling during repair can reduce life drastically.
When repairing, make sure that you are connected with the same potential as the mass of the set via a wrist wrap with resistance. Keep components and tools also at this potential.

NL WAARSCHUWING

Alle IC's en vele andere halfgeleiders zijn gevoelig voor electrostatische ontladingen (ESD).
Onzorgvuldig behandelen tijdens reparatie kan de levensduur drastisch doen verminderen. Zorg ervoor dat u tijdens reparatie via een polsband met weerstand verbonden bent met hetzelfde potentiaal als de massa van het apparaat.
Houd componenten en hulpmiddelen ook op ditzelfde potentiaal.

F ATTENTION

Tous les IC et beaucoup d'autres semi-conducteurs sont sensibles aux décharges statiques (ESD).
Leur longévité pourrait être considérablement écourtée par le fait qu'aucune précaution n'est prise à leur manipulation.
Lors de réparations, s'assurer de bien être relié au même potentiel que la masse de l'appareil et enfiler le bracelet serti d'une résistance de sécurité.
Veiller à ce que les composants ainsi que les outils que l'on utilise soient également à ce potentiel.

D WARNUNG

Alle ICs und viele andere Halbleiter sind empfindlich gegenüber elektrostatischen Entladungen (ESD).
Unsorgfältige Behandlung im Reparaturfall kan die Lebensdauer drastisch reduzieren.
Veranlassen Sie, dass Sie im Reparaturfall über ein Pulsarmband mit Widerstand verbunden sind mit dem gleichen Potential wie die Masse des Gerätes.
Bauteile und Hilfsmittel auch auf dieses gleiche Potential halten.

I AVVERTIMENTO

Tutti IC e parecchi semi-conduttori sono sensibili alle scariche statiche (ESD).
La loro longevità potrebbe essere fortemente ridatta in caso di non osservazione della più grande cauzione alla loro manipolazione.
Durante le riparazioni occorre quindi essere collegato allo stesso potenziale che quello della massa dell'apparecchio tramite un braccialetto a resistenza.
Assicurarsi che i componenti e anche gli utensili con quali si lavora siano anche a questo potenziale.

GB

Safety regulations require that the set be restored to its original condition and that parts which are identical with those specified, be used.

NL

Veiligheidsbepalingen vereisen, dat het apparaat bij reparatie in zijn oorspronkelijke toestand wordt teruggebracht en dat onderdelen, identiek aan de gespecificeerde, worden toegepast.

F

Les normes de sécurité exigent que l'appareil soit remis à l'état d'origine et que soient utiliséés les piéces de rechange identiques à celles spécifiées.

D

Bei jeder Reparatur sind die geltenden Sicherheitsvorschriften zu beachten. Der Original zustand des Geräts darf nicht verändert werden; für Reparaturen sind Original-Ersatzteile zu verwenden.

I

Le norme di sicurezza esigono che l'apparecchio venga rimesso nelle condizioni originali e che siano utilizzati i pezzi di ricambio identici a quelli specificati.

"After servicing and before returning set to customer perform a leakage current measurement test from all exposed metal parts to earth ground to assure no shock hazard exist. The leakage current must not exceed 0.5mA."

"Pour votre sécurité, ces documents doivent être utilisés par des spécialistes agréés, seuls habilités à réparer votre appareil en panne".

GB Warning !

Invisible laser radiation when open.
Avoid direct exposure to beam.

S Varning !

Osynlig laserstrålning när apparaten är öppnad och spärren är urkopplad. Betrakta ej strålen.

SF Varoitus !

Avatussa laitteessa ja suojalukituksen ohitettaessa olet alttiina näkymättömälle laserisäteilylle. Älä katso säteeseen!

DK Advarse !

Usynlig laserstråling ved åbning når sikkerhedsafbrydere er ude af funktion. Undgå udsaettelse for stråling.

INFORMATION ABOUT LEAD-FREE SOLDERING

Philips CE is producing lead-free sets from 1.1.2005 onwards.
IDENTIFICATION:

Regardless of special logo (not always indicated) one must treat all sets from 1 Jan 2005 onwards, according next rules:

Example S/N:

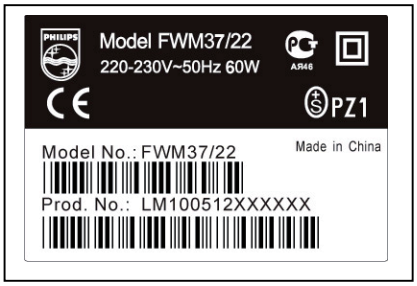

Bottom line of typeplate gives a 14-digit S/N. Digit 5&6 is the year, digit 7&8 is the week number, so in this case 2005 wk12

So from 0501 onwards = from 1 Jan 2005 onwards

***Important note*: In fact also products of year 2004 must be treated in this way as long as you avoid mixing solder-alloys (leaded/ lead-free). So best to always use SAC305 and the higher temperatures belong to this.**

Due to lead-free technology some rules have to be respected by the workshop during a repair:

- Use only lead-free solder alloy Philips SAC305 with order code 0622 149 00106. If lead-free solder-paste is required, please contact the manufacturer of your solder-equipment. In general use of solder-paste within workshops should be avoided because paste is not easy to store and to handle.

- Use only adequate solder tools applicable for lead-free solder alloy. The solder tool must be able
  - To reach at least a solder-temperature of 400°C,
  - To stabilize the adjusted temperature at the solder-tip
  - To exchange solder-tips for different applications.
- Adjust your solder tool so that a temperature around 360°C – 380°C is reached and stabilized at the solder joint. Heating-time of the solder-joint should not exceed ~ 4 sec. Avoid temperatures above 400°C otherwise wear-out of tips will rise drastically and flux-fluid will be destroyed. To avoid wear-out of tips switch off un-used equipment, or reduce heat.
- Mix of lead-free solder alloy / parts with leaded solder alloy / parts is possible but PHILIPS recommends strongly to avoid mixed solder alloy types (leaded and lead-free).
  If one cannot avoid or does not know whether product is lead-free, clean carefully the solder-joint from old solder alloy and re-solder with new solder alloy (SAC305).
- Use only original spare-parts listed in the Service-Manuals. Not listed standard-material (commodities) has to be purchased at external companies.
- Special information for BGA-ICs:
  - always use the 12nc-recognizable soldering temperature profile of the specific BGA (for de-soldering always use the lead-free temperature profile, in case of doubt)
  - lead free BGA-ICs will be delivered in so-called 'dry-packaging' (sealed pack including a silica gel pack) to protect the IC against moisture. After opening, dependent of MSL-level seen on indicator-label in the bag, the BGA-IC possibly still has to be baked dry. (MSL=Moisture Sensitivity Level). This will be communicated via AYS-website.
  Do not re-use BGAs at all.

- For sets produced before 1.1.2005 (except products of 2004), containing leaded solder-alloy and components, all needed spare-parts will be available till the end of the service-period. For repair of such sets nothing changes.

- On our website **www.atyourservice.ce.Philips.com** you find more information to:

  - BGA-de-/soldering (+ baking instructions)
  - Heating-profiles of BGAs and other ICs used in Philips-sets

  You will find this and more technical information within the "magazine", chapter "workshop news".

For additional questions please contact your local repair-helpdesk.

SERVICE INSTRUCTION

Safety regulations require that after a repair, the set must be returned in its original condition. Pay in particular attention to the following points:

- Route the wire trees correctly and fix them with the mounted cable clamps.
- Check the insulation of the AC Power lead for external damage.
- Check the strain relief of the AC Power cord for proper function.
- Check the electrical DC resistance between the AC Power Plug and the secondary side (only for sets which have a AC Power isolated power supply):

1. Unplug the AC Power cord and connect a wire between the two pins of the AC Power plug.
2. Set the AC Power switch to the "on" position (keep the AC Power cord unplugged!).
3. Measure the resistance value between the pins of the AC Power plug and the metal shielding of the tuner or the aerial connection on the set. The reading should be larger than 4.5 Mohm (For U.S. it should be between 4.2 Mohm and 12 Mohm).
4. Switch "off" the set, and remove the wire between the two pins of the AC Power plug.

- Check the cabinet for defects, to avoid touching of any inner parts by the customer.

Step 1: Placing speakers

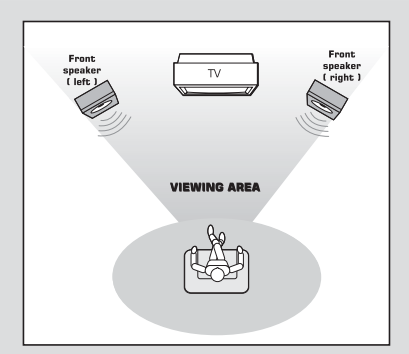

Place the front left and right speakers at equal distances from the TV set and at an angle of approximately 45 degrees from the listening position.

Notes:

– To avoid magnetic interference, do not position the front speakers too close to your TV set.

– Allow adequate ventilation around the DVD Mini Hi-Fi System.

Step 2: Connecting speakers

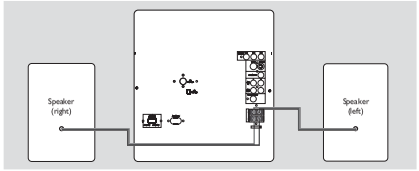

Connect the speaker wires to the SPEAKERS (FRONT) terminals, right speaker to "**R**" and left speaker to "**L**", coloured (marked) wire to "**+**" and black (unmarked) wire to "**–**". Fully insert the stripped portion of the speaker wire into the terminal as shown.

Speakers	⊖	⊕
Front Left (L)	**Black**	**White**
Front Right (R)	**Black**	**Red**

Notes:

– For optimal sound performance, use the supplied speakers.

– Do not connect more than one speaker to any one pair of +/- speaker terminals.

– Do not connect speakers with an impedance lower than the speakers supplied. Please refer to the SPECIFICATIONS section of this manual.

IMPORTANT!

The type plate is located on the rear of the system.

To avoid overheating of the system, a safety circuit has been built in. Therefore, your system may switch to Standby mode automatically under extreme conditions. If this happens, let the system cool down before reusing it.

Step 3: Connecting TV set

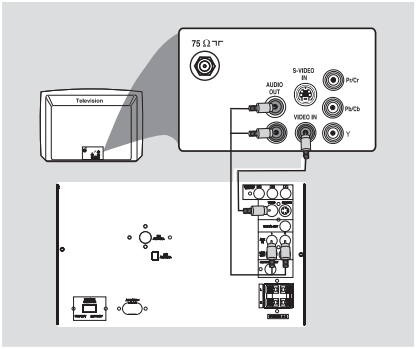

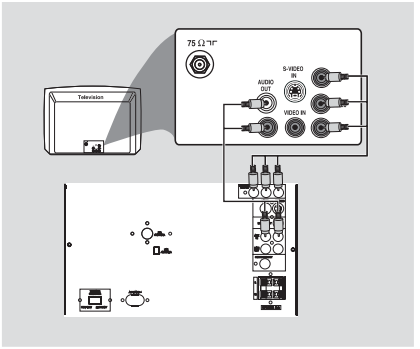

IMPORTANT!

– You only need to make one video connection from the following options, according to the capabilities of your TV system.

– S-Video or Component Video connection provides higher picture quality. These options must be available on your TV set.

– Connect the system directly to the TV set.

Using Video In jack (CVBS)

- Use the composite video cable (yellow) to connect the system's **VIDEO** jack to the video input jack (or labeled as A/V In, Video In, Composite or Baseband) on the TV set.
- To listen to TV channels through this system, use the audio cables (white/red) to connect **AUX IN (L/R)** jacks to the corresponding AUDIO OUT jacks on the TV set.
- Deactivate Progressive Scan through SYSTEM MENU. Refer to Using the Setup Menu- Using Progressive Scan to improve image quality.

Using component Video In jack (Pr Pb Y)

- Use the component video cables (red/blue/green) to connect the system's **Pr Pb Y** jacks to the corresponding Component video input jacks (or labeled as Pr/Cr Pb/Cb Y or YUV) on the TV set.
- To listen to TV channels through this system, use the audio cables (white/red) to connect **AUX IN** jacks to the corresponding AUDIO OUT jacks on the TV set.
- If you are using a Progressive Scan TV set (TV with Progressive Scan or ProScan capability), activate the PROGRESSIVE SCAN function through SYSTEM MENU.

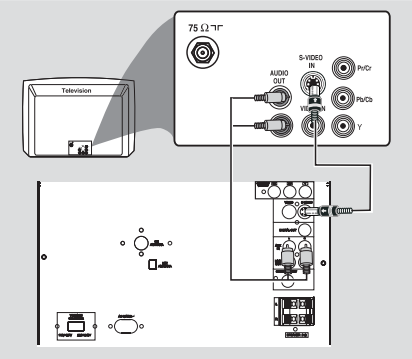

Using S-Video In jack

- Use the S-Video cable (not supplied) to connect the system s **S-VIDEO OUT** jack to the S-Video input jack (or labeled as Y/C or S-VHS) on the TV set.
- To listen to TV channels through this system, use the audio cables (white/red) to connect **AUX IN** jacks to the corresponding AUDIO OUT jacks on the TV set.
- Deactivate Progressive Scan through **SYSTEM MENU**. Refer to Using the Setup Menu- Using Progressive Scan to improve image quality.

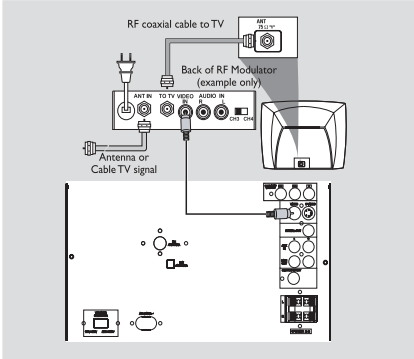

IMPORTANT!

– If your TV set only has a single Antenna In jack (or labeled as 75 ohm or RF In), you will need a RF modulator in order to view the DVD playback via TV. See your electronics retailer or contact Philips for details on RF modulator availability and operations.

Using an accessory RF modulator

- Use the composite cable (yellow) to connect the system s **VIDEO** jack to the video input jack on the RF modulator.
- Use the RF coaxial cable (not supplied) to connect the RF modulator to your TV s RF jack.
- Deactivate Progressive Scan through **SYSTEM MENU**. Refer to Using the Setup Menu- Using Progressive Scan to improve image quality.

Connections

Step 4: Connecting FM/MW antennas

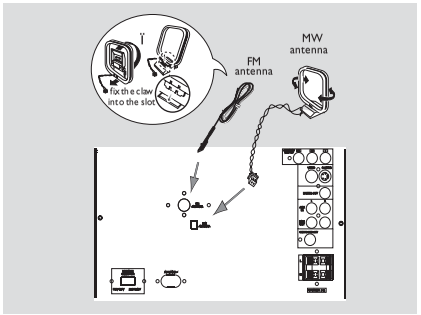

- Connect the supplied MW loop antenna to the **MW** jack. Place the MW loop antenna on a shelf or attach it to a stand or wall.
- Connect the supplied FM antenna to the **FM** jack. Extend the FM antenna and fix its end to the wall.

For better FM stereo reception, connect an outdoor FM antenna to the FM ANTENNA terminal.

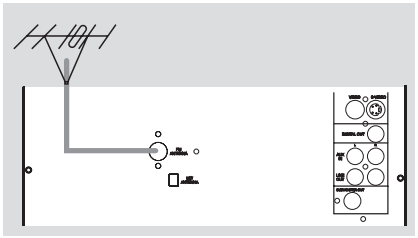

Notes:

– Adjust the position of the antennas for optimal reception.

– Position the antennas as far as possible from your TV set, VCR or other radiation sources to prevent unwanted interference.

Step 5: Connecting the power cord

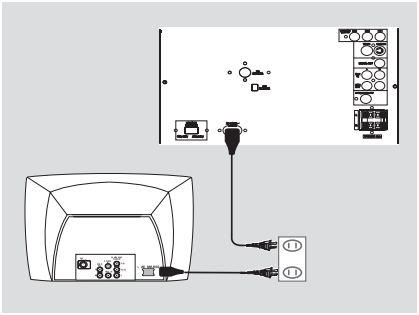

After everything is connected properly, plug in the AC power cord to the power outlet.

Never make or change any connection with the power switched on.

On the DVD Mini Hi-Fi System

"AUTO INSTALL–PRESS PLAY " may appear on the display panel. Press ▶II on the front panel to search and store all available radio stations or press ■ to exit (See page 36, Tuner Operations- Presetting radio stations).

If your system is equipped with a Voltage Selector, set the VOLTAGE SELECTOR to the local power line voltage.

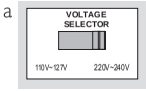

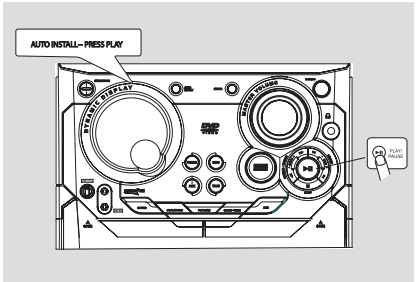

Connections

Step 6: Connecting a VCR or cable/satellite box

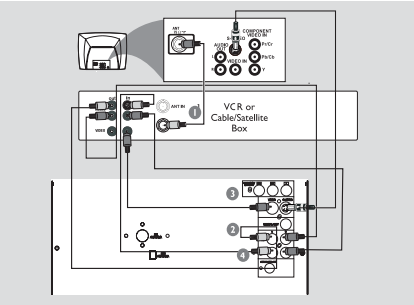

Viewing and listening to playback

1 Connect the VCR or Cable/Satellite Box to the TV system as shown.

2 Connect the system's AUX IN jacks to the AUDIO OUT jacks on the VCR or Cable/ Satellite box.

Before starting operation, press **AUX** on the remote control to select "AUX" in order to activate the input source.

Using the VCR for recording DVDs

Some DVDs are copy-protected. You cannot record or dub protected discs using a VCR.

3 Connect the system's **VIDEO** jack to the VIDEO IN jack on the VCR.

4 Connect the system's **LINE OUT (R/L)** jacks to the AUDIO IN jacks on the VCR. This will allow you to make analog stereo (two channel, right and left) recording.

To view DVD playback while recording

You must connect the system to your TV system using the S-VIDEO (as shown above) or the Component (Pr Pb Y) video connection.

Step 7: Connecting digital audio equipment

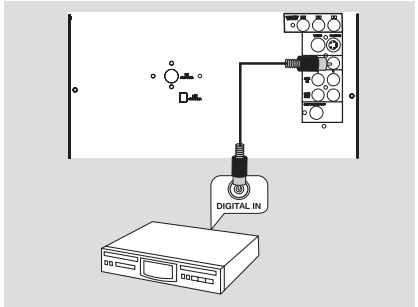

Recording (digital)

Connect the system's DIGITAL OUT jack to the DIGITAL IN jack on a digital recording device (DTS-Digital Theater System compatible, with a Dolby Digital decoder, for example).

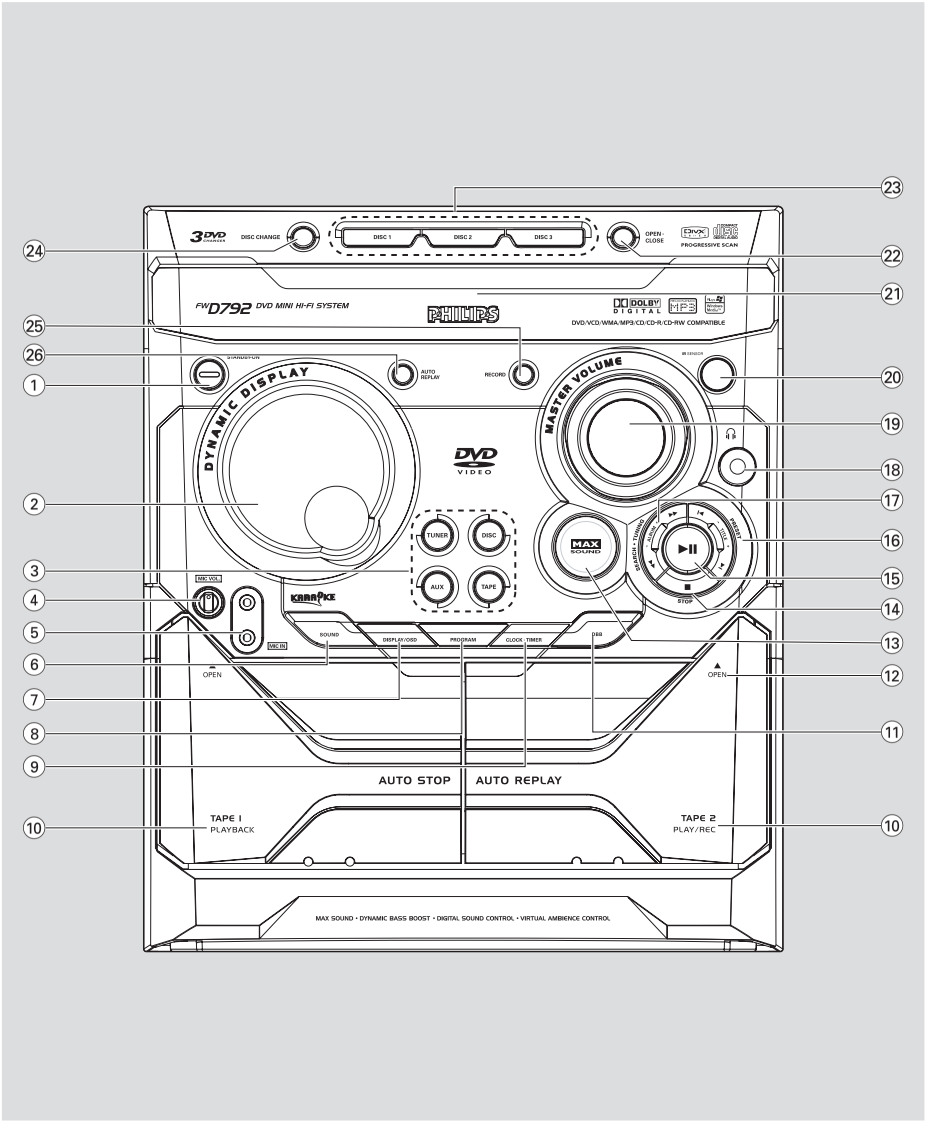

Controls on the system

① **STANDBY ON**
– to switch the system on, to Standby mode.

② **DISPLAY SCREEN**
– to view the current status of the system.

③ **SOURCE**
– to select the following:
DISC (DISC 1•2•3)
– to select disc tray 1, 2 or 3
TUNER (BAND)
– to select waveband: FM or MW.
TAPE (TAPE 1-2)
– to select tape deck 1 or 2.
AUX
– to select a connected external source: TV/CDR, AUX (auxiliary).

④ **MIC VOL.**
– to adjust the mixing level for karaoke or microphone recording.

⑤ **MIC IN**
– to connect microphone jack.

⑥ **SOUND**
– to select various sound effect.

⑦ **DISPLAY/OSD**
– to display disc information during disc playback.

⑧ **PROGRAM**
– in disc mode, to program favorite tracks.
– in tuner mode, to program favorite stations.

⑨ **CLOCK/TIMER**
– to view and set clock/ timer.

⑩ **TAPE DECK 1/ 2**

⑪ **DBB (Dynamic Bass Boost)**
– to select the desired DBB level (DBB 1, DBB 2, DBB3 or DBB OFF).

⑫ **▲OPEN**
– to open the tape deck door.

⑬ **MAX SOUND**
– To activate or deactivate MAX sound.

⑭ **STOP ■**
for DISC ..... to stop playback or to clear a programme.
for DEMO ..... (*in Standby mode*) to activate/ deactivate demonstration.
for PLUG&PLAY ... (*on the system only*) to exit plug&play mode.

⑮ **▶II (PLAY/PAUSE)**
for DISC ..... to start or interrupt playback.
for TAPE ..... to start playback.
for PLUG&PLAY ... (*on the system only*) to initiate plug & play mode.

⑯ **PREV / PRESET / NEXT ⏮ ⏭ (TITLE – / +)**
for DISC ..... to select previous/next title, chapter or track during playback.
for TUNER ..... to select a preset radio station.
for CLOCK/TIMER .. to set the hour.

⑰ **SEARCH•TUNING ◀◀ / ▶▶ (ALBUM – / +)**
for DISC ..... to search backward/forward. to select previous/next album in MP3/WMA stop mode (with MENU ON).
for TAPE ..... to rewind or fast forward.
for TUNER ..... to tune to a lower or higher radio frequency.
for CLOCK/TIMER .. to set the minute.

⑱ 🎧
– to connect headphones.

⑲ **MASTER VOLUME**
– to increase or decrease the volume.

⑳ **IR SENSOR**
– point the remote control towards this sensor.

㉑ **DISC TRAYS**

㉒ **OPEN•CLOSE**
– to open or close the disc tray.

㉓ **DISC1/ DISC2/ DISC3**
– to select a disc tray for playback.

㉔ **DISC CHANGE**
– to change disc(s).

㉕ **RECORD**
– to start recording on tape deck 2.

㉖ **AUTO REPLAY**
– In tape mode, to select continuous playback in either REPLAY or PLAY mode only.

Functional Overview

Remote control

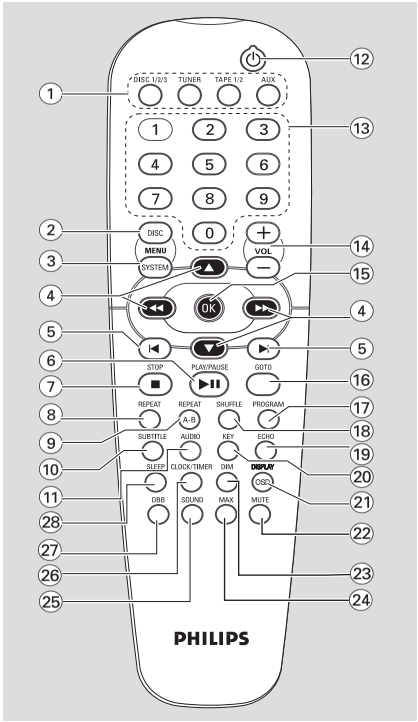

Notes:
– First, select the source you wish to control by pressing one of the source select keys on the remote control (DISC or TUNER, for example).
– Then select the desired function (▶▶ , ⏮ or ⏭ for example).

① **SOURCE**
– to select the relevant active mode: DISC1/2/3, TUNER, TAPE1/2 or AUX.
– TUNER: toggles between FM and MW band.

② **DISC MENU (disc mode only)**
– to enter or exit the disc contents menu.

③ **SYSTEM MENU (disc mode only)**
– to enter or exit the system menu bar.

④ **◀◀ / ▶▶ / ▲ / ▼**
– to select movement direction in disc contents menu/system menu bar.
– in tuner mode, to tune to lower or higher radio frequency. (◀◀ / ▶▶ ••
– in Disc mode, press to fast reverse/forward the disc.

⑤ **⏮/ ⏭**
– in Disc mode, press to skip to the previous/next chapter/track.
– in Tuner mode, to select a preset radio station number

⑥ **PLAY/PAUSE ▶II**
– to start or interrupt disc playback.
– to resume playback from last stop point.

⑦ **STOP ■**
– to stop playing the disc.

⑧ **REPEAT**
– to select variations of continuous playback.

⑨ **REPEAT A-B**
– to repeat a specific section on a disc.

⑩ **SUBTITLE**
– to select desired subtitle.

⑪ **AUDIO**
– to select the audio channel.

⑫ ⏻
– to switch to standby mode.

⑬ **Numeric Keypad (0-9)**
– to enter a track/title number of the disc.
– to enter a number of preset radio stations.

⑭ **VOL +/-**
– adjust the volume level.
– adjust key control/ ECHO level in karaoke mode.

⑮ **OK**
– to exit or confirm the selection.

⑯ **GOTO**
– to go direct to desired title, chapter or time.

⑰ **PROGRAM**
– in Disc mode, to program favorite tracks.
– in Tuner mode, to program favorite stations.

⑱ **SHUFFLE**
– to playback in random mode.

⑲ **ECHO**
– to adjust the echo level in karaoke mode.

⑳ **KEY**
– to change the tone level to suit your vocal range.

㉑ **DISPLAY (OSD)**
– to view the time, title or chapter information.

㉒ **MUTE**
– to interrupt or resume sound reproduction.

㉓ **DIM**
– to select different brightness for VFD.

㉔ **MAX**
– To activate or deactivate MAX sound.

㉕ **SOUND**
– to select various sound effect.

㉖ **CLOCK/TIMER**
– to view and set clock/ timer.

㉗ **DBB (Dynamic Bass Boost)**
– to select the desired DBB level (DBB 1, DBB 2, DBB3 or DBB OFF).

㉘ **SLEEP**
– to set the sleep (auto-off) timer function.

IMPORTANT!
– Make sure to complete the preparation procedures before operating the system.

Step 1: Inserting batteries into the remote control

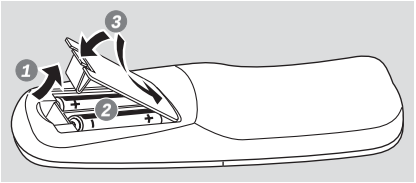

1 Open the battery compartment.
2 Place two batteries (Type R06 or AA) in the compartment with the correct polarity as indicated by "+" and "–" symbols.
3 Close the cover.

Using the remote control to operate the system

1 Point the remote control directly at the remote sensor (IR) on the front panel.

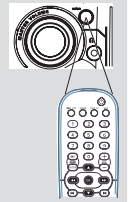

2 Select the source you wish to control by pressing one of the source select buttons on the remote control (for example TAPE1/2, TUNER).
3 Then select the desired function (for example ▶II, I◀ or ▶I).

CAUTION!
– Remove batteries if they are exhausted or will not be used for a long time.
– Do not use old and new or different types of batteries in combination.
– Batteries contain chemical substances, so they should be disposed of properly.

Step 2: Setting the clock

The clock can be set in either 12-hour or 24-hour mode ("*PM 00:00*" or "*00:00*" for example).

1 The clock can be set in any source mode.
➜ If you have not set the clock, "--:--" will be shown on the display.

2 Press and hold **CLOCK/TIMER** until "*SELECT CLOCK OR TIMER*" is displayed.
➜ Press I◀ or ▶I to change the display to "CLOCK".
➜ Press **CLOCK/TIMER** again to confirm.
3 Press I◀ or ▶I on the system to set the hours.
4 Press ◀◀ or ▶▶ on the system to set the minutes.
5 Press **CLOCK/TIMER** to confirm your setting. The system will store the setting automatically and go back to its previous status.
➜ The time setting becomes effective.

Note:
– In AUX mode, setting clock using remote control is not possible.

To exit the setting without storing (in standby mode)

- Press ■ on the system to exit.
  ➜ "*CANCEL*" will appear on the display.
- Press **STANDBY ON** to exit setting mode and go into **POWER ON** mode.
- You can also press **DISC**, **DISC1~3**, **DISC CHANGE**, **OPEN/CLOSE** to exit setting mode and go into disc mode.
- The system will also exit setting mode and go to TUNER, TAPE or AUX mode when you press the corresponding source button.

Viewing the clock in any source mode

- When you have set the clock, press • • • • • / • • **TIMER** to view clock. Press **DISPLAY** on the system to toggle between 12-hour and 24-hour modes.
  ➜ The time will be displayed for 5 seconds and then go back to its previous status.

Notes:
– The clock will be cancelled when the power cord is disconnected or if a power failure occurs.
– During clock setting, if no button is pressed within 10 seconds, the system will exit the setting mode and go back to its previous status.

Step 3: Setting the TV set

IMPORTANT!
– Make sure you have completed all the necessary connections. (See Connections – Connecting TV set)

1 Press **DISC (DISC 1•2•3)** on the front panel (or press **DISC 1/2/3** on the remote control).

2 Turn on the TV set and set to the correct Video-In channel. You should see the blue Philips DVD background screen on the TV set.
➜ You may go to channel 1 on your TV set, then press the channel down button repeatedly until you see the Video In channel.
➜ Or, you can use the TV remote control to select different video modes.
➜ Or, set TV to channel 3 or 4 if you are using an RF modulator.

Selecting the color system that matches your TV set

This DVD Mini Hi-Fi System is compatible with both NTSC and PAL. For the playback of a DVD disc on this DVD Mini Hi-Fi System, the color systems of the DVD, TV set and DVD Mini Hi-Fi System should match.

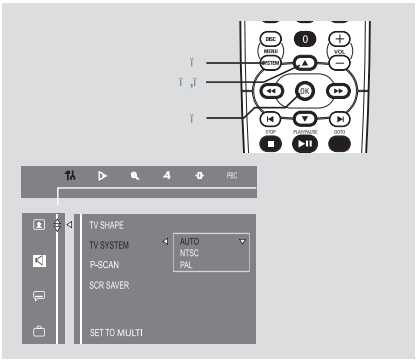

1 In disc mode, stop playback and press **SYSTEM MENU**.

2 Select icon and press ▼.

3 Press ◀◀ / ▶▶ / ▲ / ▼ keys on the remote control to toggle through the functions and select your preferred option.
➜ Move to and press ▶▶ .
➜ Move to "TV System" and press ▶▶ .

AUTO
– Select this if the connected TV set is compatible with both NTSC and PAL (multi system). The output format will be consistent with the video signal of the disc.

NTSC
– Select this if the connected TV set is NTSC system. It will change the video signal of a PAL video disc and output to NTSC system.

PAL
– Select this if the connected TV set is PAL system. It will change the video signal of an NTSC disc and output to PAL format.

4 Select an item and press **OK**.

To remove the menu
Press **SYSTEM MENU**.

Step 4: Setting language preference

You can select your preferred language settings so that this DVD Mini Hi-Fi System will automatically switch to the language for you whenever you load a disc. If the language selected is not available on the disc, the language set by default will be used instead. But the menu language of the DVD Mini Hi-Fi System cannot be changed once selected.

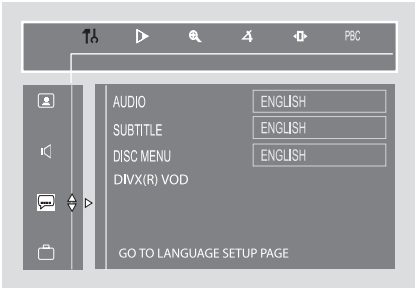

1 In disc mode, stop playback and press **SYSTEM MENU**.

2 Select icon and press ▼.

3 Press ◀◀ / ▶▶ / ▲ / ▼ keys on the remote control to select your preferred option.
➜ Move to and press ▶▶ .
➜ Move to one of the following and press ▶▶ .
– Audio (disc's soundtrack)
– Subtitle (disc's subtitles)
– Disc Menu (on screen menu)

4 Press ▲ / ▼ to select a language and press **OK**.

5 Repeat **steps 3~4** for other settings.

To remove the menu
Press **SYSTEM MENU**.

Troubleshooting

WARNING
Under no circumstances should you try to repair the system yourself, as this will invalidate the warranty. Do not open the system as there is a risk of electric shock.

If a fault occurs, first check the points listed below before taking the system for repair. If you are unable to remedy a problem by following these hints, consult your dealer or Philips for help.

Problem	Solution
No power.	✔ Check if the AC power cord is properly connected.
"NO DISC" is displayed.	✔ Check if the disc is inserted upside down. ✔ Wait until the moisture condensed at the lens has cleared. ✔ Replace or clean the disc, see "Maintenance". ✔ Use a readable disc or correctly recorded format MP3-CD.
No picture.	✔ Select the appropriate video input mode on the TV set. ✔ Check if the TV set is switched on. ✔ Check the video connection. ✔ Check if the system is securely connected.
Distorted or poor picture.	✔ Sometimes a slight picture distortion may appear. This is not a malfunction. ✔ Clean the disc. ✔ Connect the system to the S-video input of your TV set.
The aspect ratio of the screen cannot be changed even though you have set the TV shape.	✔ The aspect ratio is fixed on the DVD disc. ✔ The aspect ratio may not be changed for some TV systems.
The DVD player does not start playback.	✔ Insert a readable disc. ✔ Check the disc type, color system and region code. ✔ Clean the disc. ✔ Place the disc with the playback side down. ✔ Press SYSTEM MENU to turn off the setup menu. ✔ Cancel the parental control rating function or change the rating level. ✔ Moisture has condensed inside the system. Remove the disc and leave the system turned on for about an hour.
The system does not respond when the buttons are pressed.	✔ Disconnect the power plug from the jack, and insert again.

Troubleshooting

Problem	Solution
The language for the sound or subtitle cannot be changed when playing a DVD.	✔ Multi-language sound or subtitle is not recorded on the DVD. ✔ Changing the language for the sound or subtitle is prohibited on the DVD.
No image is output when a function is selected.	✔ Make sure the component is connected correctly. ✔ Press the correct function button for the input source.
Sound cannot be heard or is of poor quality	✔ Adjust the volume. ✔ Disconnect the headphones. ✔ Check that the speakers are connected correctly. ✔ Check if the stripped speaker wire is clamped. ✔ If the system is in pause, slow motion or fast forward/reverse mode, press ▶II to resume the normal play mode. ✔ Make sure the MP3-CD was recorded within 32-256 kbps bit rate with sampling frequencies at 48 kHz, 44.1 kHz or 32 kHz.
Poor radio reception.	✔ If the signal is too weak, adjust the antenna or connect an external antenna for better reception. ✔ Increase the distance between the System and your TV set or VCR.
Recording or playback cannot be made	✔ Clean deck parts, see "Maintenance". ✔ Use only NORMAL tape. ✔ Apply a piece of adhesive tape over the missing tab space.
The tape deck door cannot open	✔ Remove and reconnect the AC power plug and switch on the system again.
Left and right sound outputs are reversed.	✔ Check the speaker connections and location.
The remote control does not function.	✔ Point the remote control at the remote control sensor of the unit. ✔ Reduce the distance to the player. ✔ Remove any possible obstacles. ✔ Replace the batteries with new ones. ✔ Check that the batteries are loaded correctly.
The display is dark	✔ Press DIM again.
The timer is not working	✔ Set the clock correctly. ✔ If recording is in progress, stop it
The Clock/Timer setting is erased	✔ Power has been interrupted or the power cord has been disconnected. Reset the clock/timer.

System, Region code, Tuner, etc. setting procedure

1) System Reset

a) Press "SYSTEM" button on R/C. TV show "SETUP"
b) Select the menu using the "▼" and "►" button on R/C
c) Go feature setup page to do system reset

2) Region Code Change

After replacement / repair of the MPEG board, the customer setting and the region code may lost. Changing the Region code will put the player back in the state which it has left the factory.

Region Code

1	USA
2	EU
3	AP
4	Australia, NZ, Latam
5	RUSSIA, INDIA
6	CHINA

TV System

1	NTSC
2	PAL
3	AUTO

Menu/ Audio Subtitle (AS) Language

1	English
2	English
3	English
4	English

AFS

001	LX3000D/LX3500D /MRD200
002	MX3600D/MX3800
003	LX3700D/LX3750W
005	MRD210
006	MX3660D
008	FWD573/FWD792/FWD798

oem derivative

08

- region code = 1 digit
- tv system = 1 digit
- "as/menu lang" = 1 digit
- "AFS" = "architechture Feature Set" = 3 digits

This field is used to define the architecture / features sets for each product.

- "oem derivative" = 2 digit

This field is use to define the OEM set. This will affect the background display.

Hence in total, reprograming will be done by way of the remote control. It should run as below :-

a) Put the player in stop mode. No disc loaded.
b) Press the following key on remote control:

For FWD798/98 (A/P) :
<PLAY> <159> <331> <008> <08> <PLAY>

✱ After the Region Code is changed it is necessary to reset the system so that the new Region Code will be fully effective. All customer setting will be lost.

✱ On top of the maximum number of times allowed for changing the region code is changed to 25.

✱ When the counter reach 25, you will not be able to further change the code until you reset the timer by the Region Code timer reset procedure

CAUTION !

This information is confidencial and may not be distributed. Only a qualified service person should reprogram the Region Code.

2-1

3) Region code change timer reset

Press below key to reset the timer :
a) In DISC source, stop mode and no disc in tray.
b) Press R/C "Play -159-PLAY" to reset timer to 25

4) Tuner area change

a) Press the "OPEN/CLOSE" button to open the set's door
b) Press "1" "5" "9" button by using R/C.
c) TV Show "TUNER AREA"
d) Select the tuner area you want by using the "▼" and "►" button on R/C, then press "OK" to confirm. TV show " TUNER AREA CHANGED"
If you didn't press it in five seconds, the system will remain original status.

AREA	BAND	FREQUENCY (Hz)		STEP(Hz)
A/P (/98)	FM	87.5M	108M	50K
	MW	531K	1602K	9K
		530K	1710K	10K

Note :-

Please refer to the above different tuner area.

5. Video Out Change

a) Press "SYSTEM" on R/C button
b) Select the menu using the "▼" and "►" button on R/C
c) Go picture setup page select Video out item.

6. Password Change

a) Press "SYSTEM" on R/C button
b) Select the menu using the "▼" and "►" button on R/C
c) Go feature setup page select "PASSWORD". TV show "ENTER CODE".Press 4 times of "STOP" button on R/C.
d) Select "PARENTAL" "8 ADULT" on TV.
e) Enter PASSWORD to "1234".
✱ "1234" is a default password supplied.

7. Checking on the Software version

a) Open the CD door.
b) Press "123" and "OK" on the remote control.
c) TV will show the version on screen.

8. Upgrading new software

a) Open the door, then insert the CD-R program disc.
b) Close the door.
c) TV will show:-
- "disc loading"
- "bank30.rom"
- "writing" about 6 seconds.
- "Done"

✱ The latest upgraded is in version VER*****.

2-2

REPAIR INSTRUCTIONS (1 of 2)

MAIN UNIT REPAIR CHART

- A — All Function No Working
- B — Power Supply No Working
- C — All Function No Sound
- D — Earphone No Sound
- E — Audio Line No Output
- F — Subwoofer Pre No Output
- G — DVD Audio No Sound
- H — Aux in No Sound
- I — Tuner No Sound
- J — TAPE DECK No Sound
- K — MIC/ ECHO No Sound
- M — Digital Line No Output

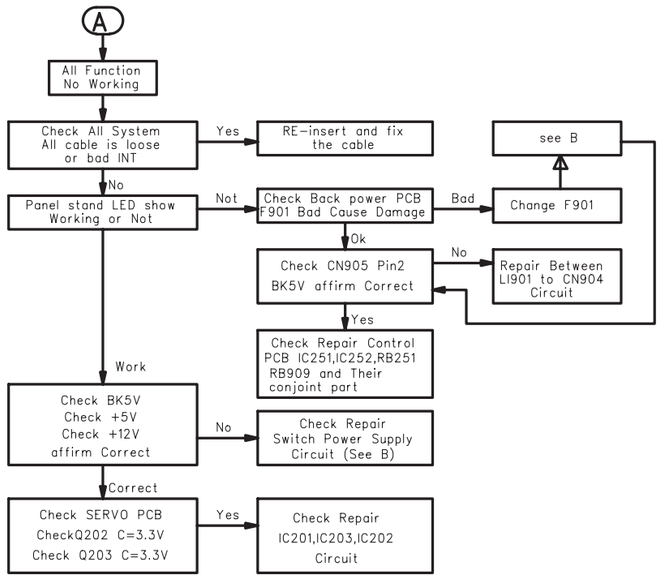

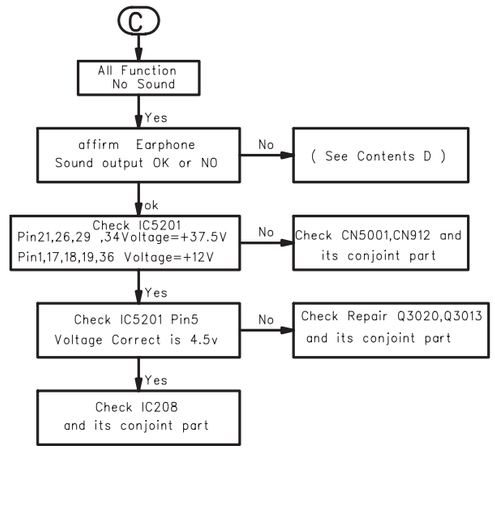

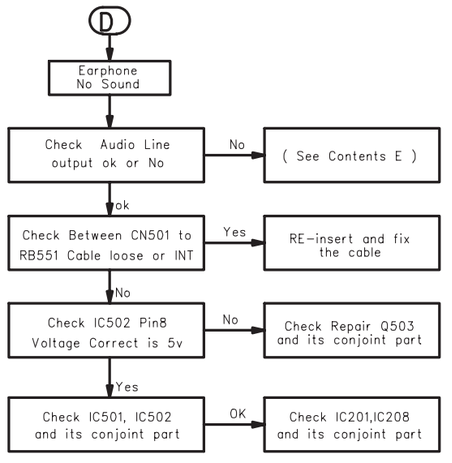

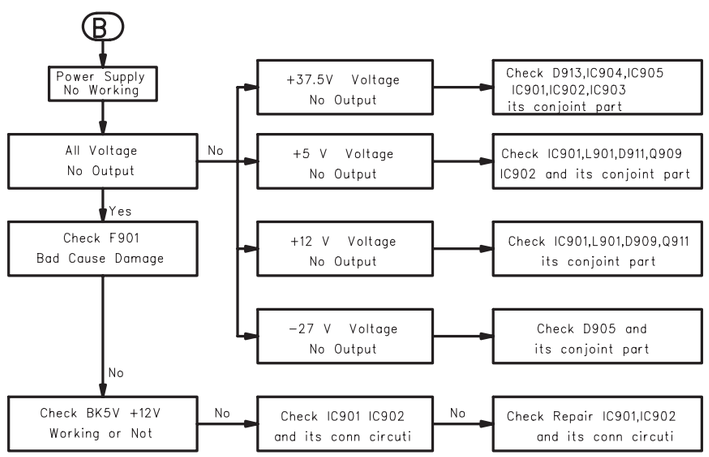

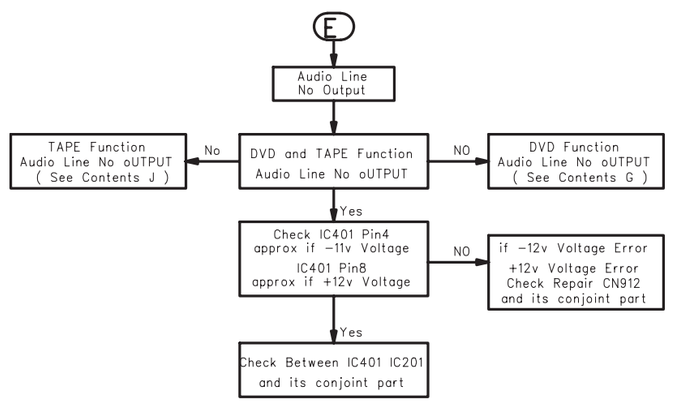

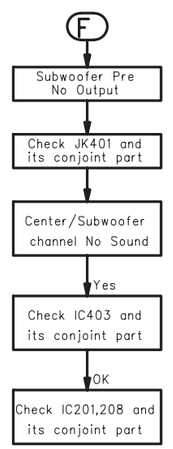

2-3

REPAIR INSTRUCTIONS (2 of 2)

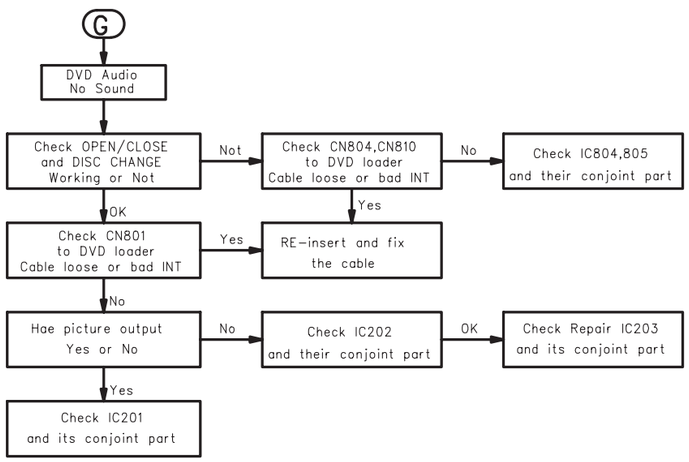

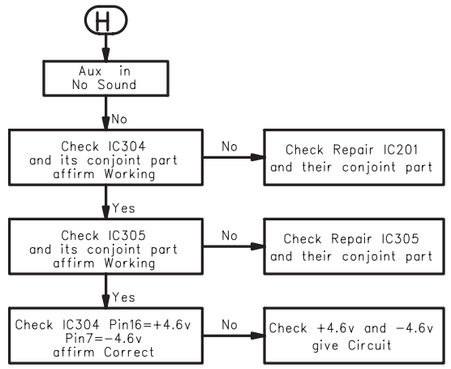

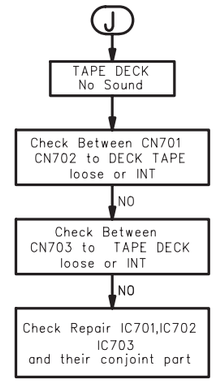

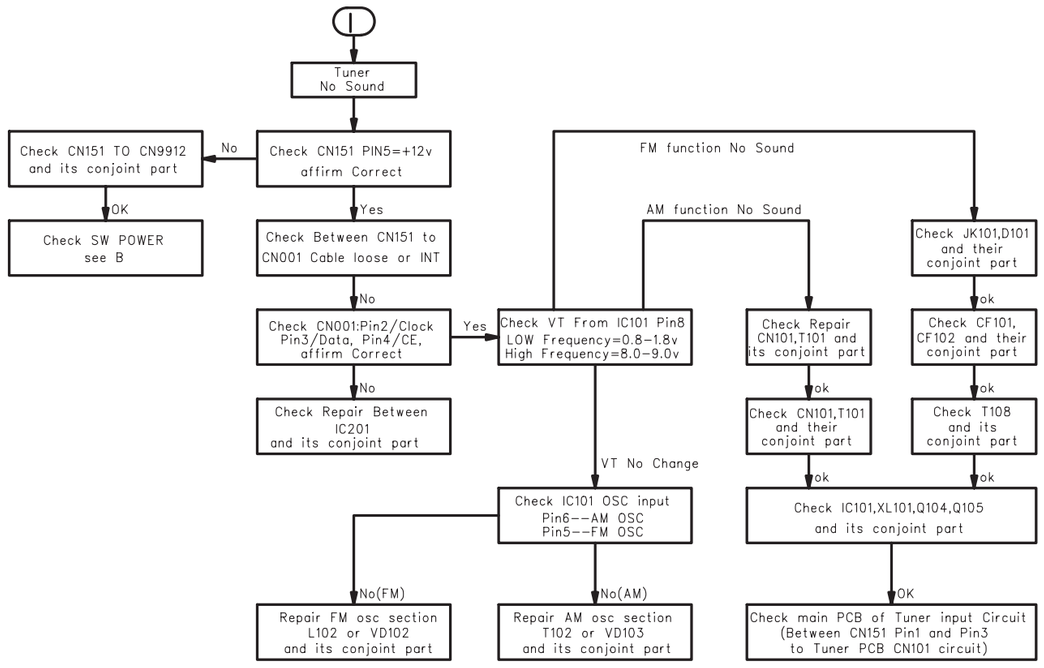

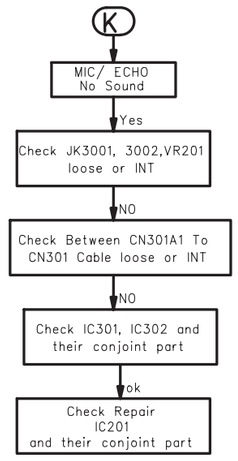

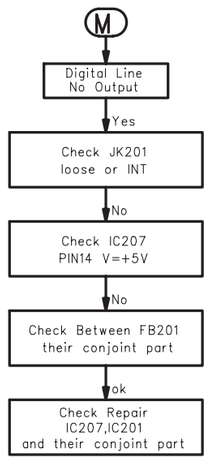

DISMANTLING INSTRUCTIONS

Dismantling the DVD Module

1) Loosen the 4 screws at top cover , 2 screws at slide Cover and 4 screws at back panel as Figure 1 & 2.

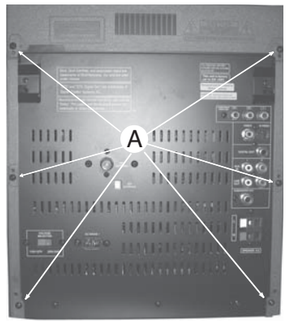

Figure 1

Figure 2

2) Push the gear slowly towards the front as shown in figure 3 until the CDC tray starts to move out of the Front Cabinet. The CDC tray is now disengaged and can be pulled out completely.

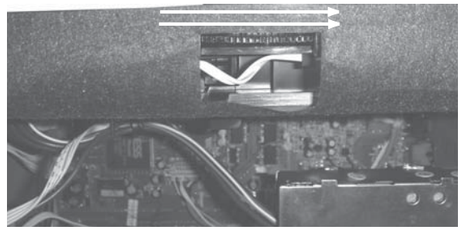

Figure 3

3) Remove the Cover Tray as shown in figure 4.

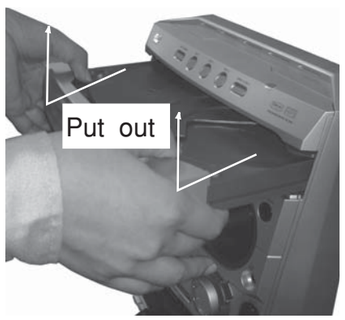

Figure 4

4) Loosen the 2 screws at front of DVD loader as Figure 5.

Figure 5

5) Loosen the 2 screws at back of DVD loader as Figure 6.

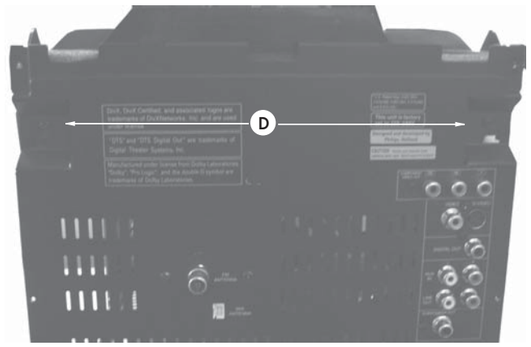

Figure 6

Dismantling of the Cover Front Display

1) Remove the Volume knobs as stated in Dismantling the Cover Front Display in Figure 7.
2) Loosen 2 screws at the bottom of front panel.

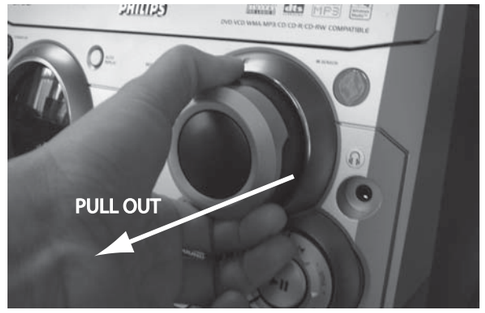

Figure 7

Dismantling the Main board

1) Release 7 screws 'E' to free the Main board from the back panel assembly as shown in Figure 8.
2) Loosen 1 screw 'F' at the side of the set as shown in Figure 9.
3) Release 2 screws ' G ' on the heat sink as shown in Figure 10.

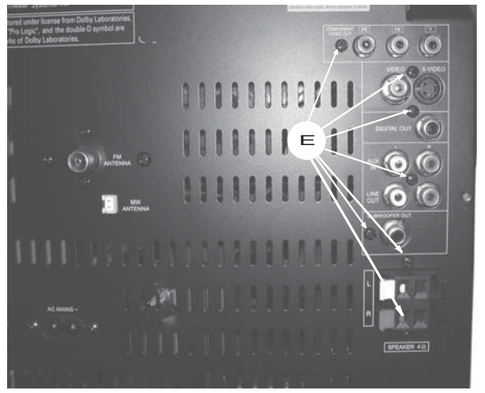

Figure 8

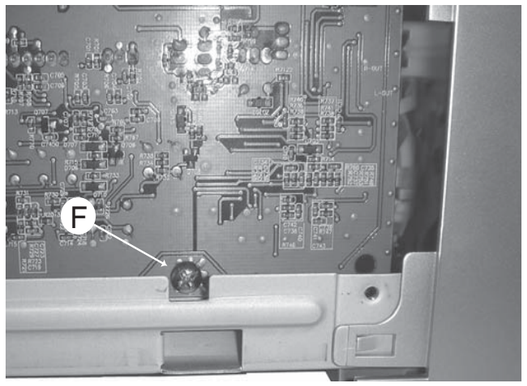

Figure 9

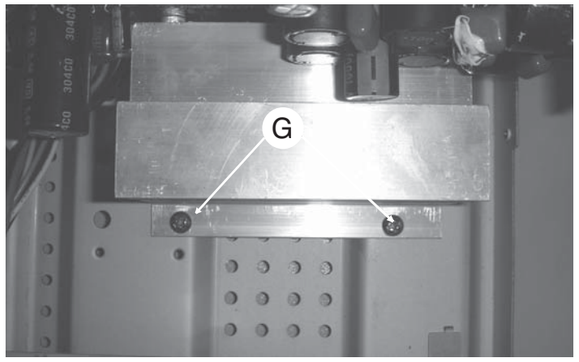

Figure 10

Dismantling of the Control Board & Cassette Module

1) Loosen 19 screws 'H' to remove the control board figure 11.

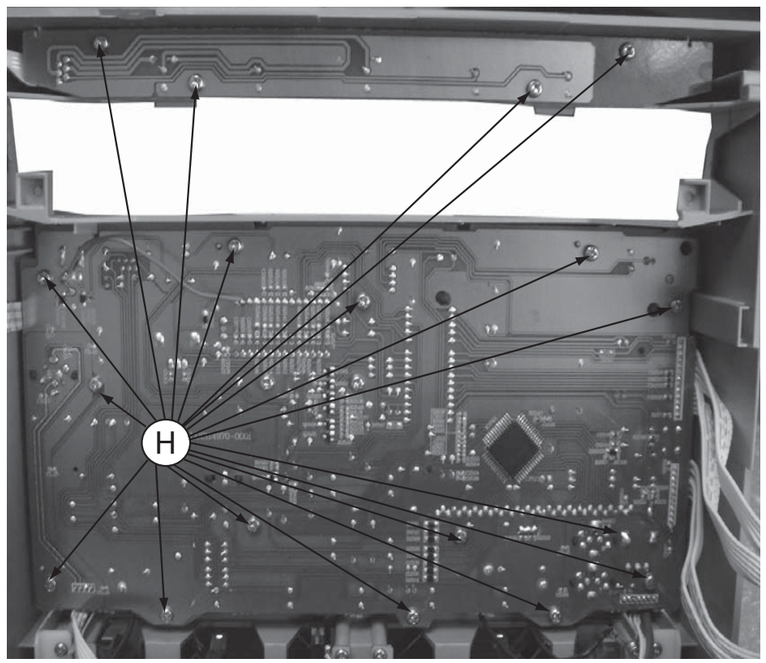

2) Loosen 4 screws 'I' to remove the Cassette Module figure 12.

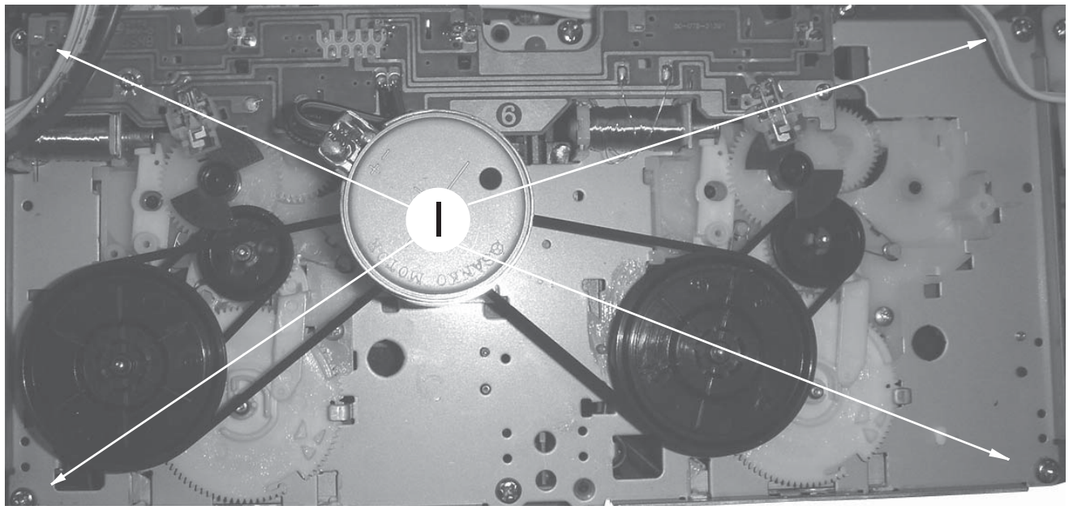

Figure 12

3-2

Dismantling of the Power Board

1) Loosen 4 screws 'J' to remove the Power Board figure 13.

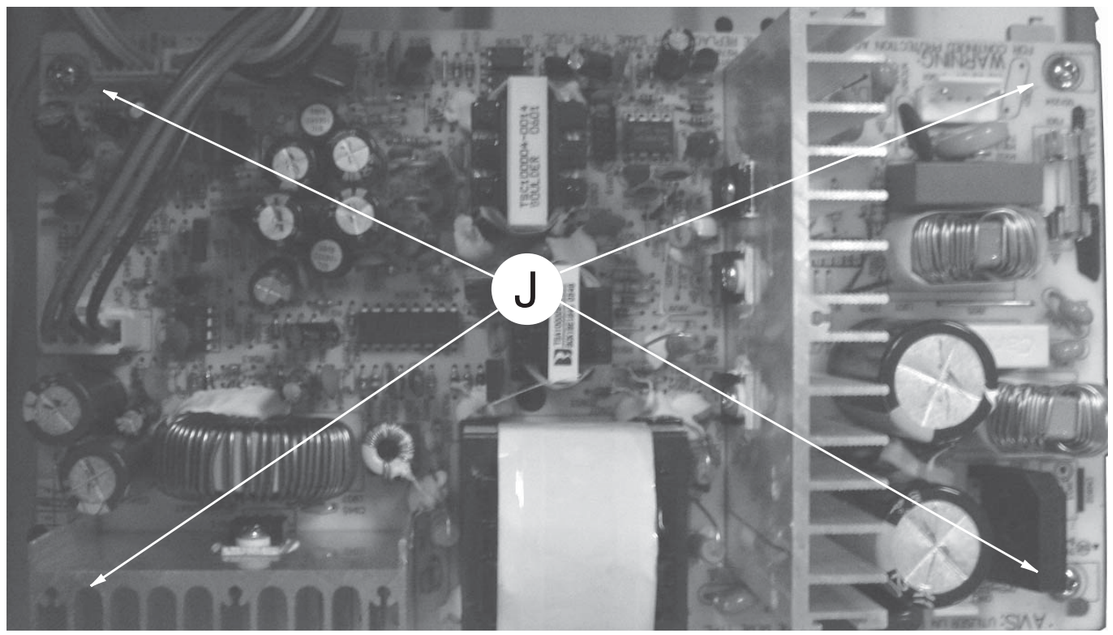

Figure 13

3-3

Service positions

Service position A

Note: After re-assembly, it is very important to ensure the wires are properly inserted into their respective sockets and routed not to touch or obstruct any moving parts.

Service position B

Service position C

4-1

BLOCK DIAGRAM

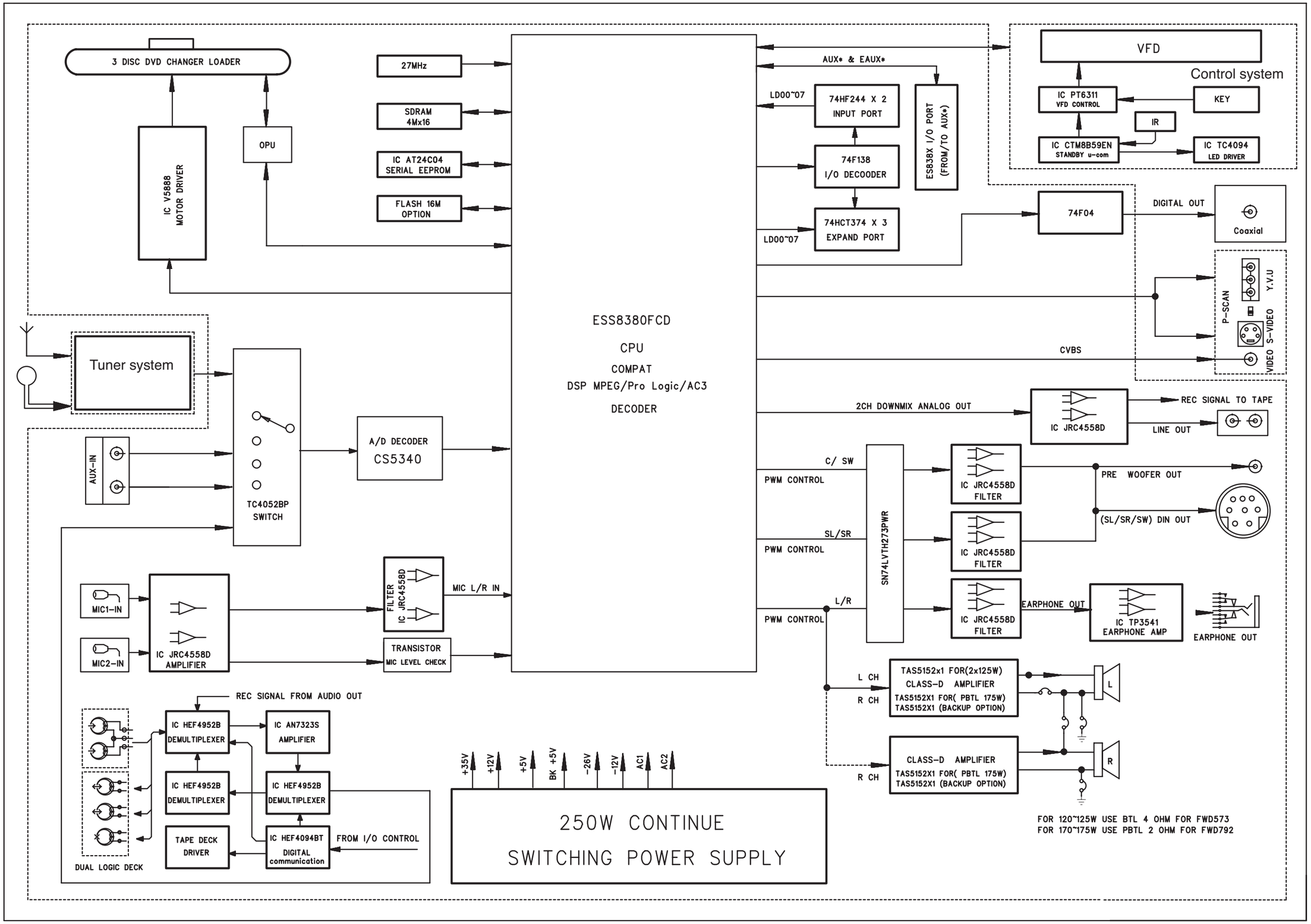

4-2

WIRING DIAGRAM

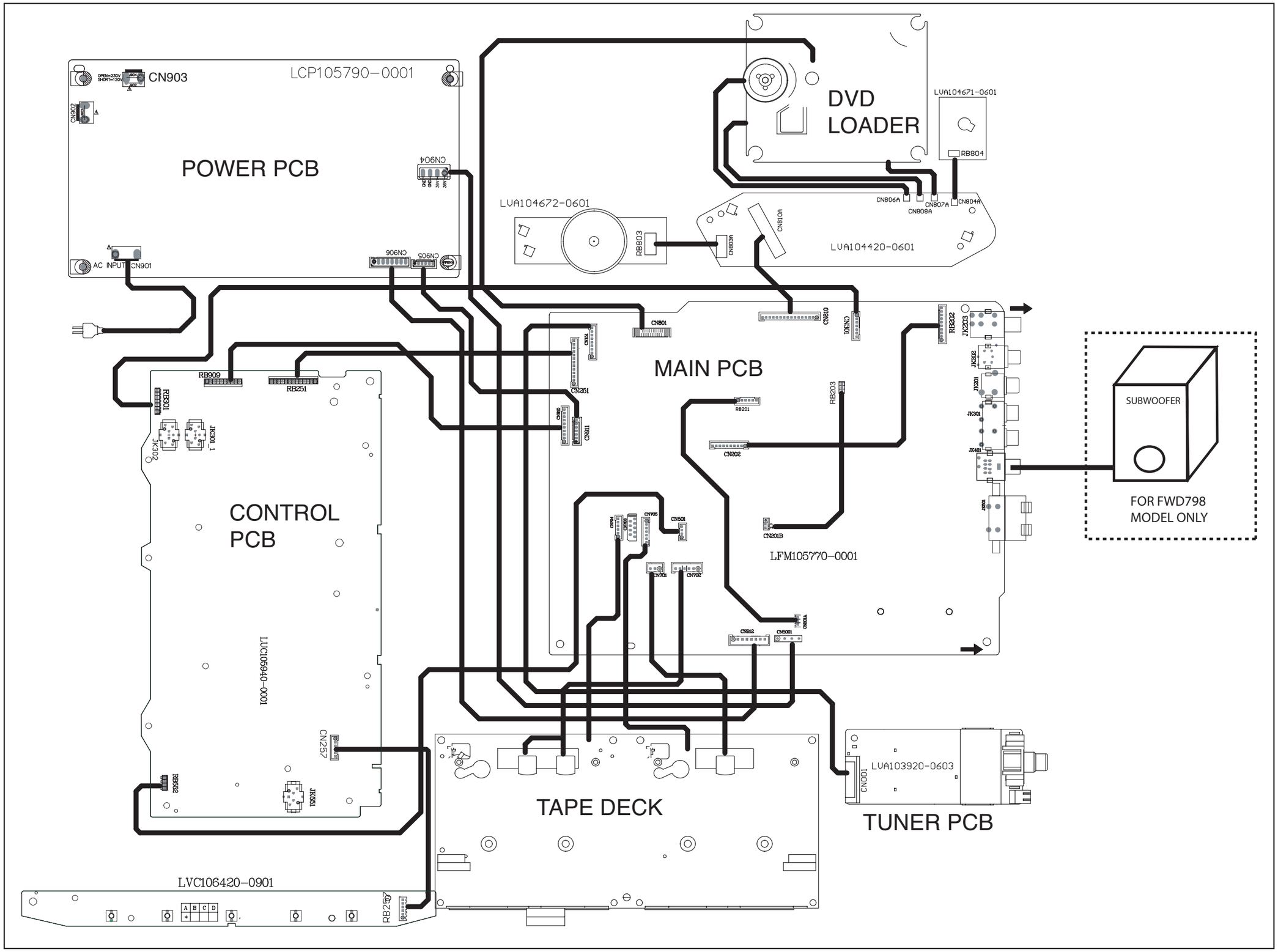

CONTROL BOARD

TABLE OF CONTENTS

FTD Display Pin Assignment 5-1
Pin Connection 5-1
Circuit Diagram 5-2
PCB Layout (Key / sw / motor PCB) 5-3
PCB Layout Top View 5-4
PCB Layout Bottom View 5-5
Electrical Parts List & Voltages 5-6

FTD DISPLAY PIN ASSIGNMENT

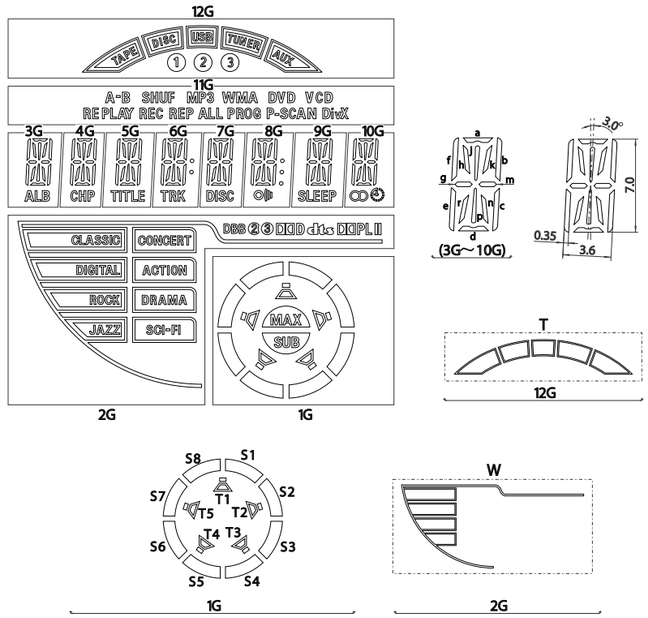

栅 / 阳	1G	2G	3G	4G	5G	6G	7G	8G	9G	10G	11G	12G
P1	S1	CONCERT	a	a	a	a	a	a	a	a	DivX	AUX
P2	S8	ACTION	h	h	h	h	h	h	h	h	P-SCAN	USB
P3	T5	DRAMA	j,p	j,p	j,p	j,p	j,p	j,p	j,p	j,p	MP3	③
P4	T1	DIGITAL	k	k	k	k	k	k	k	k	WMA	DISC
P5	S2	CLASSIC	b	b	b	b	b	b	b	b	PROG	T
P6	S7	SCI-FI	f	f	f	f	f	f	f	f	V	TUNER
P7	MAX	ROCK	m	m	m	m	m	m	m	m	CD	②
P8	SUB	JAZZ	g	g	g	g	g	g	g	g	DVD	①
P9	T2	W	c	c	c	c	c	c	c	c	REP	---
P10	S3	DBB	e	e	e	e	e	e	e	e	ALL	TAPE
P11	T4	②	r	r	r	r	r	r	r	r	REC	---
P12	T3	③	n	n	n	n	n	n	n	n	SHUF	---
P13	---	DD	d	d	d	d	d	d	d	d	A	---
P14	S4	dts	---	---	---	Col	---	Col	---	---	-B	---
P15	S5	DPL	---	---	---	---	---	Dp	---	∞	RE	---
P16	S6	II	ALB	CHP	TITLE	TRK	DISC	◇▷	SLEEP	⏻	PLAY	---

PIN CONNECTION

PIN NO.	1	2	3	4	5	6	7	8	9	10	11	12	13	14	15	16	17	18	19
CONNECTION	F1	F1	F1	NP	1G	2G	3G	4G	5G	6G	7G	8G	9G	10G	11G	12G	NX	NX	P16
PIN NO.	20	21	22	23	24	25	26	27	28	29	30	31	32	33	34	35	36	37	38
CONNECTION	P15	P14	P13	P12	P11	P10	P9	P8	P7	P6	P5	P4	P3	P2	P1	NP	F2	F2	F2

Note
1. F : Filament **2. G :Grid** **3. P :Anode** **4. NP :No Pin** **5. Nx :No extended**

5-2

CIRCUIT DIAGRAM: CONTROL PCB

C2501	A4	C2512	C4	C2525	B7	C5017	D7	C852	C1	D2506	D7	IC2501	C6	Q2506	B4	R2510	B4	R2521	B4	R2536	B6	R2548	C5	R2560	B5	RB909	C2	TA2506	D5	TA2517	D5	ZD2501	C4
C2502	A4	C2513	C4	C2526	B6	C5018	D7	CN257	D2	D2507	D6	IC2502	B5	Q2507	B3	R2511	B4	R2522	B4	R2537	B6	R2549	C5	R2561	C4	SN2501	B4	TA2507	D5	TA2518	D5	ZD2502	C4
C2503	A4	C2514	C4	C2527	B7	C5019	D7	CN803A	C2	D2508	D7	LD2501	B4	Q2508	B4	R2512	B4	R2523	B4	R2538	B6	R2550	C5	R2562	C4	SW801	C1	TA2508	D5	TA2519	D5	ZD2503	B3
C2504	A4	C2515	C4	C2528	A7	C5301	C5	CN804A	C2	D2509	D6	LD2502	C4	Q2509	C4	R2513	B4	R2524	B4	R2539	B6	R2551	C5	R2563	A4	SW802	C1	TA2509	D6	TA2525	D1		
C2505	A4	C2518	C5	C2529	A8	C5302	C5	CN806A	C2	D2510	D7	M1	B1	R2501	A5	R2514	B4	R2525	B5	R2540	B6	R2552	C5	R257	D2	SW803	A2	TA2510	D6	TA2526	D1		
C2506	B4	C2519	C5	C3020	D7	C5303	C5	CN807A	C2	D2511	D6	M2	A1	R2502	A5	R2515	B4	R2526	B4	R2541	B6	R2553	C6	RB251	A2	SW804	A2	TA2511	D5	TA2527	D1		
C2507	B4	C2520	C5	C3055	D2	C5400	D4	CN808A	C2	DP2501	A7	Q2501	A3	R2505	A4	R2516	B4	R2527	B3	R2542	B6	R2554	C6	RB257	D2	TA2501	C4	TA2512	D5	TA2528	D1		
C2508	B4	C2521	C5	C3056	D2	C5401	D4	CN810A	C1	FB2501	A3	Q2502	A3	R2506	A4	R2517	B4	R2529	C3	R2543	B5	R2555	C6	RB301	D3	TA2502	C5	TA2513	D5	TA2529	D1		
C2509	B4	C2522	C5	C3057	D2	C5402	D4	D2502	B4	FB2502	A3	Q2503	B3	R2507	A4	R2518	B3	R2530	C3	R2544	B5	R2557	B3	RB552	D6	TA2503	D4	TA2514	D4	TA2530	C5		
C2510	B4	C2523	C6	C5015	D7	C5403	D4	D2504	D7	FB2503	A3	Q2504	B3	R2508	A4	R2519	B4	R2531	C4	R2546	B5	R2558	B3	RB803	A1	TA2504	D5	TA2515	D4	VR301	D3		
C2511	B4	C2524	B6	C5016	D7	C851	C1	D2505	D6	FB2505	B3	Q2505	B3	R2509	A4	R2520	B4	R2532	C4	R2547	B6	R2559	B4	RB804	B1	TA2505	D5	TA2516	D5	XL2501	B4		

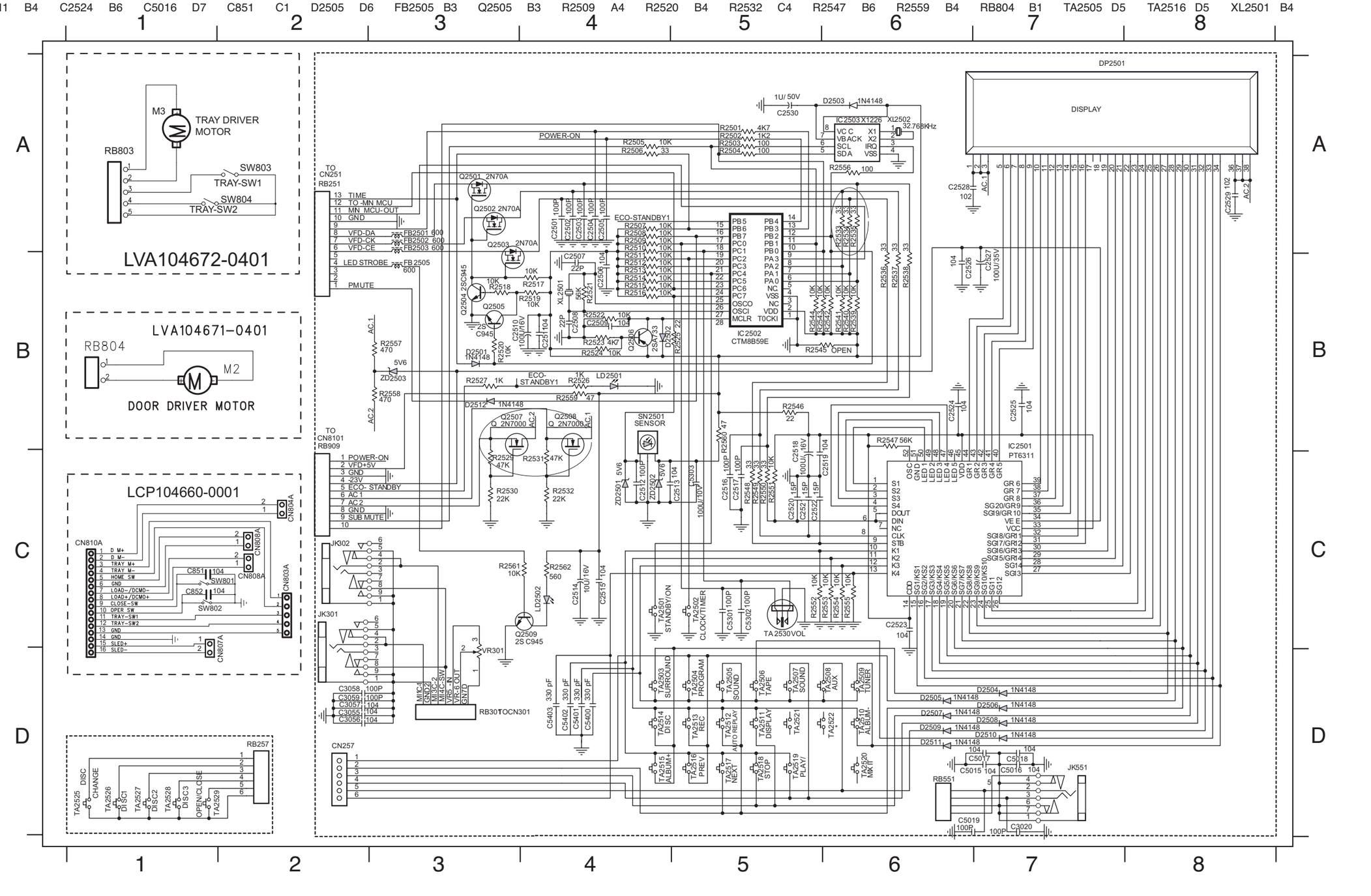

5-3

PCB LAYOUT:KEY / SW / MOTOR PCB

C851	A1	CN803A	A1	CN806A	A2	CN808A	A2	J801	A1	J803	A1	J805	A1	M1	B1	RB257	B2	RB804	B1	SW802	A2	SW804	B2
C852	A1	CN804A	A2	CN807A	A2	CN810A	A1	J802	A1	J804	A1	J806	A1	M2	B1	RB803	B1	SW801	A1	SW803	B2		

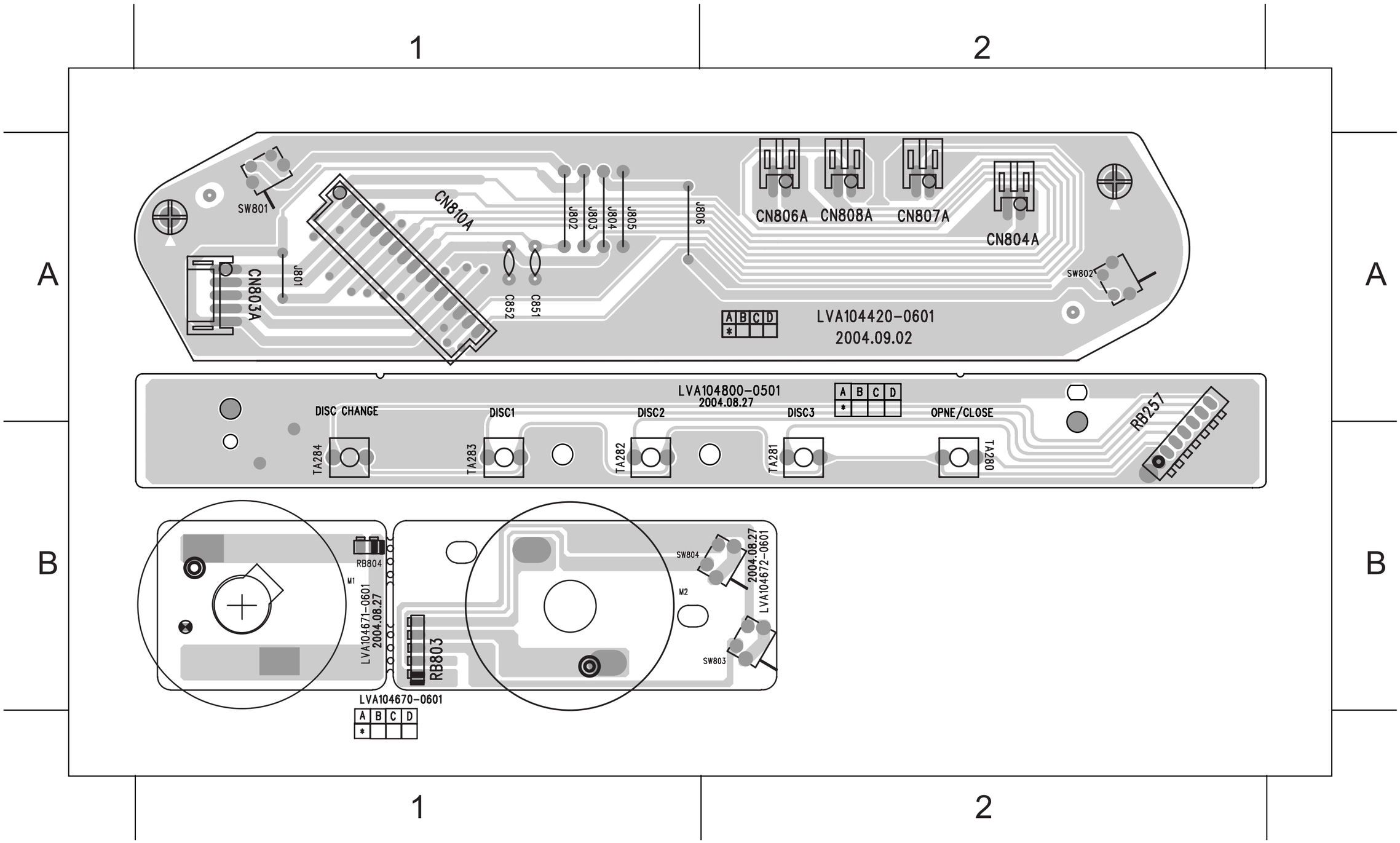

5-4

PCB LAYOUT - CONTROL PCB (TOP VIEW)

C2510	A2	JK302	B3	JP2508	A3	JP2517	B3	JP2527	A2	JP2536	A2	JP2545	B2	JP2554	A2	JP2563	A2	JP2572	A2	JP2588	A1	JP2597	B2	JP2606	B1	Q2508	B3	TA2504	B2	TA2513	A2	TP3	B3
C2514	A2	JK551	A1	JP2509	A3	JP2518	A3	JP2528	A2	JP2537	A2	JP2546	B2	JP2555	A2	JP2564	A2	JP2577	A2	JP2589	A1	JP2598	B2	JP2607	B1	RB251	A3	TA2505	B3	TA2514	B2	VR301	B3
C2518	A3	JP2501	B3	JP2510	B3	JP2519	A3	JP2529	A2	JP2538	B3	JP2547	B2	JP2556	A2	JP2565	A2	JP2578	A1	JP2590	A2	JP2599	B2	JP2608	B1	RB301	B3	TA2506	B2	TA2515	A1	XL2501	A1
C2527	B3	JP2502	B3	JP2511	B3	JP2520	A3	JP2530	A2	JP2539	B3	JP2548	B2	JP2557	A2	JP2566	A2	JP2579	A1	JP2591	A2	JP2600	B3	JP2609	B1	RB552	B1	TA2507	B1	TA2516	B1		
C5303	A1	JP2503	B3	JP2512	B3	JP2522	A2	JP2531	A2	JP2540	B3	JP2549	B2	JP2558	A2	JP2567	A2	JP2580	A1	JP2592	A2	JP2601	B1	JP2613	B1	RB909	B3	TA2508	B2	TA2517	A1		
CN257	A1	JP2504	B3	JP2513	A3	JP2523	A2	JP2532	A2	JP2541	B2	JP2550	B2	JP2559	A2	JP2568	A2	JP2581	A1	JP2593	A2	JP2602	B1	JP5001	A1	SN2501	A1	TA2509	B2	TA2518	B1		
DP2501	A3	JP2505	B3	JP2514	B3	JP2524	A2	JP2533	A2	JP2542	B2	JP2551	B2	JP2560	A1	JP2569	B2	JP2585	A1	JP2594	A2	JP2603	B1	LD2501	A3	TA2501	A3	TA2510	B1	TA2519	B1		
IC2502	A2	JP2506	A3	JP2515	B3	JP2525	A2	JP2534	A2	JP2543	B2	JP2552	A2	JP2561	A2	JP2570	A2	JP2586	A1	JP2595	B2	JP2604	B1	LD2502	B1	TA2502	B2	TA2511	B2	TA2530	A1		
JK301	B3	JP2507	A3	JP2516	B3	JP2526	A2	JP2535	A2	JP2544	B2	JP2553	A2	JP2562	A2	JP2571	A2	JP2587	A1	JP2596	B2	JP2605	B1	Q2507	B3	TA2503	B1	TA2512	A2	TP1	B3		

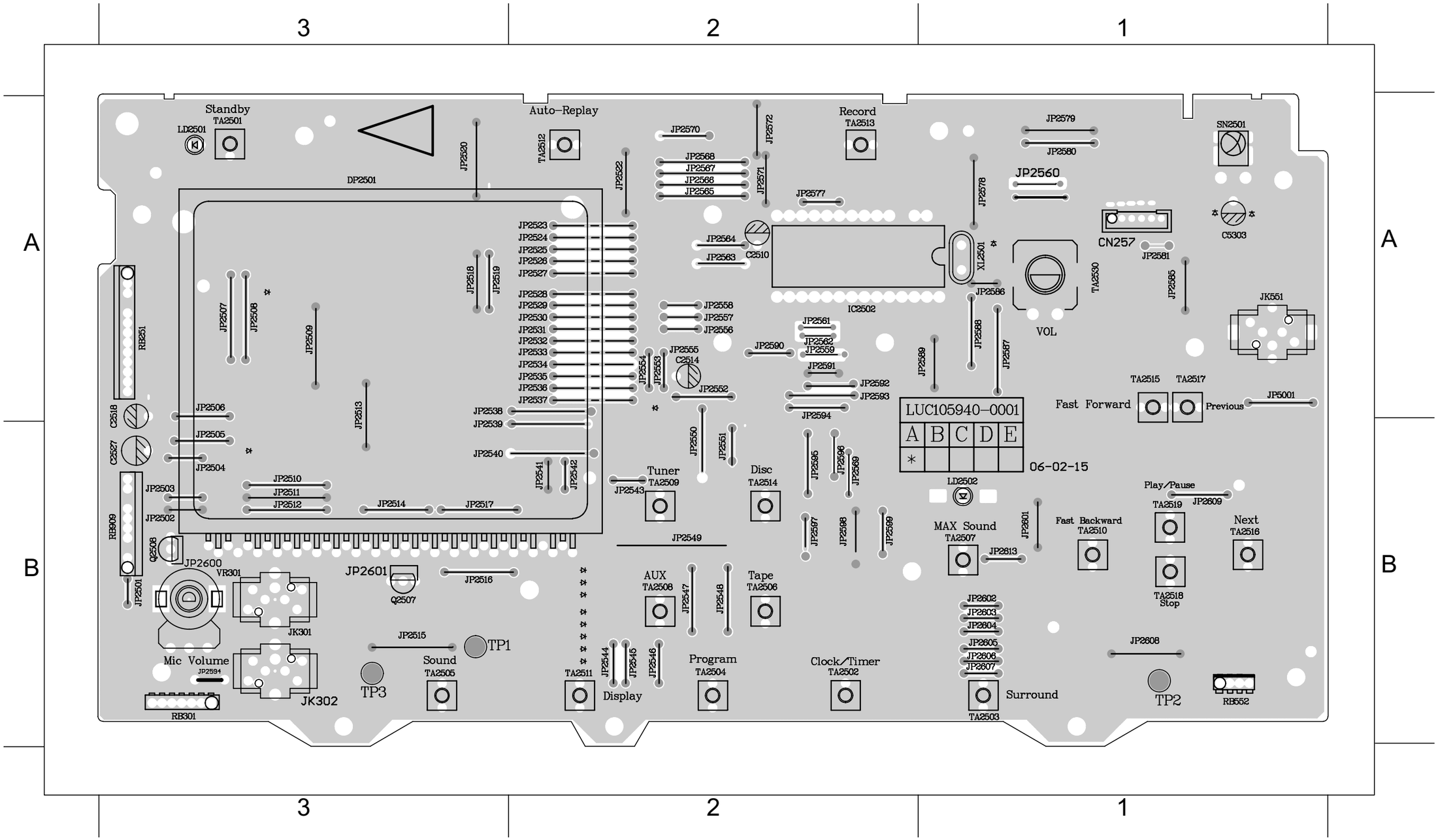

5-5

PCB LAYOUT - CONTROL PCB (BOTTOM VIEW)

C2501	A2	C2508	A1	C2521	B2	C2529	B2	C5019	A1	C5308	A1	D2505	B2	FB2501	A3	Q2503	A2	R2505	B3	R2512	A2	R2519	A2	R2526	A2	R2538	A2	R2546	B3	R2553	B2	R2561	B2	ZD2503	B3
C2502	A2	C2509	A1	C2522	B2	C3055	B3	C5301	A1	C5309	A1	D2506	B2	FB2502	A3	Q2504	A2	R2506	A3	R2513	A2	R2520	B2	R2527	A2	R2539	A2	R2547	A3	R2554	B2	R2562	B2		
C2503	A2	C2512	A1	C2523	B3	C3057	B3	C5302	A1	C5400	B2	D2507	B2	FB2503	A3	Q2505	A2	R2507	A2	R2514	A2	R2521	A1	R2529	B3	R2540	A2	R2548	A2	R2555	B2	R2563	A2		
C2504	A2	C2513	A1	C2524	B2	C5015	A1	C5304	A1	C5401	B2	D2508	B2	FB2505	A3	Q2506	A2	R2508	A2	R2515	A2	R2522	A1	R2530	B3	R2541	A2	R2549	B2	R2557	B3	R257	A3		
C2505	A2	C2515	B3	C2525	A3	C5016	A1	C5305	A1	C5402	B2	D2509	B2	IC2501	A3	Q2509	B2	R2509	A2	R2516	A2	R2523	A2	R2531	B3	R2542	A2	R2550	A2	R2558	B3	R2602	A3		
C2506	A2	C2519	B3	C2526	B3	C5017	B1	C5306	A1	D2502	A1	D2510	B2	Q2501	A2	R2501	A2	R2510	A2	R2517	A2	R2524	A2	R2536	A2	R2543	A2	R2551	A2	R2559	B3	ZD2501	A1		
C2507	A2	C2520	A2	C2528	B3	C5018	B1	C5307	A1	D2504	B2	D2511	B2	Q2502	A2	R2502	A2	R2511	A2	R2518	A2	R2525	A1	R2537	A2	R2544	A2	R2552	B2	R2560	A1	ZD2502	A1		

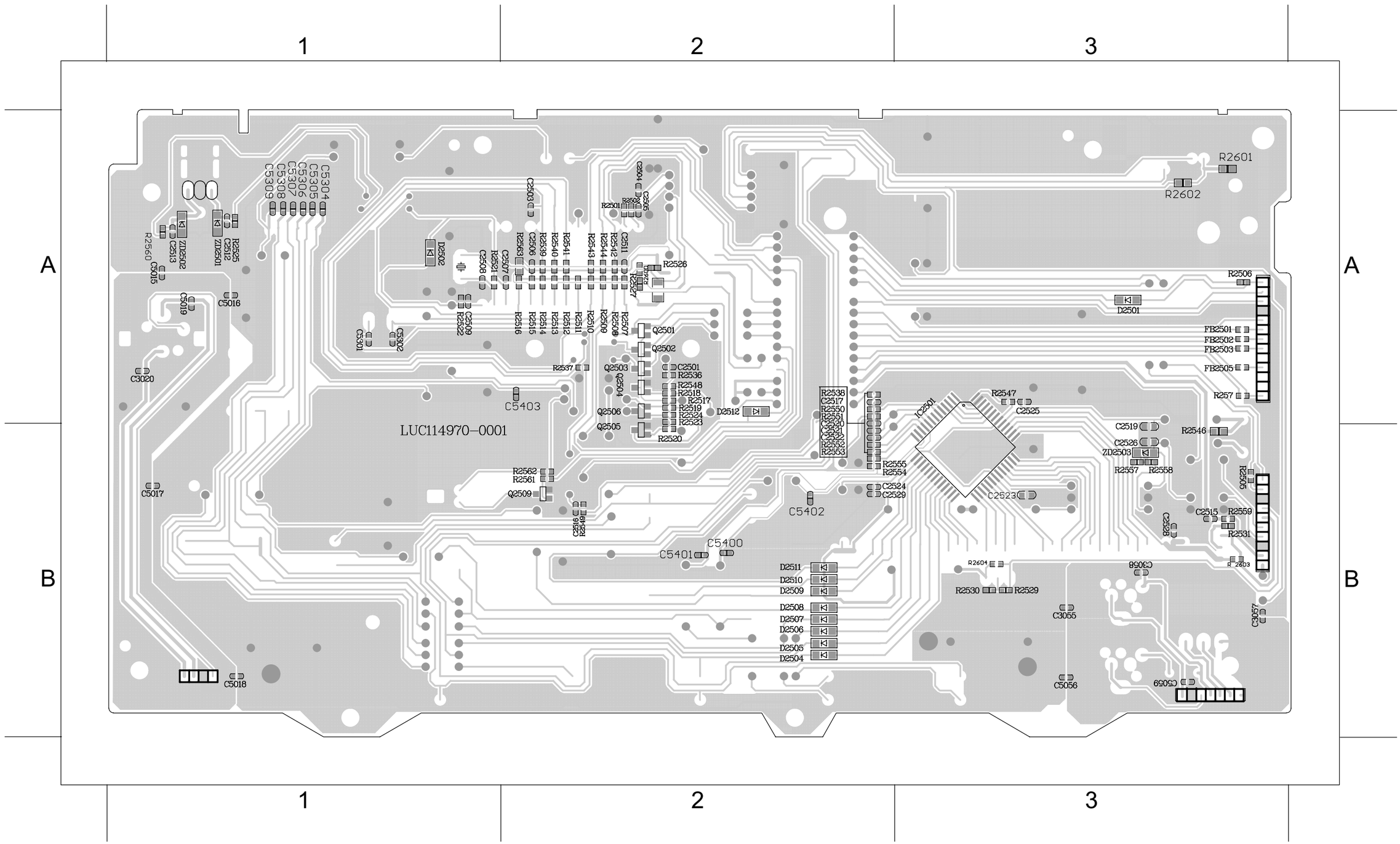

ELECTRICAL PARTS LIST - CONTROL BOARD

DP2501	9965 000 38410	VFD 38P
IC2501	9940 000 00907	IC 52 PIN TP6311QH
IC2502	9965 000 38412	IC 28P EM78P447SAPY-G
JK301	9940 000 01558	KARAOKE JACK 7P D3.5MM
JK302	9940 000 01558	KARAOKE JACK 7P D3.5MM
JK551	9940 000 01559	PHONE JACK D3.5MM 8P
LD2501	9940 000 00878	LED 3 DIA RED ROUND
LD2502	9940 000 01561	LED 3DIA SUPER RED LENS
Q2501	9940 000 00914	FET 2N7002LT1
Q2502	9940 000 00914	FET 2N7002LT1
Q2503	9940 000 00914	FET 2N7002LT1
Q2504	9940 000 00915	XISTR NPN 2SC1623
Q2505	9940 000 00915	XISTR NPN 2SC1623
Q2506	9940 000 00921	XISTR PNP 2SA812 HFE:200-400
Q2509	9940 000 00915	XISTR NPN 2SC1623
SN2501	9940 000 05259	IRT RECEIV. IRM-2638F4
SW801	9940 000 01556	DETECTOR SW. 1C-1P DS-1120B
SW802	9940 000 01556	DETECTOR SW. 1C-1P DS-1120B
TA2501	9940 000 00872	TACT SW 50MA 12V
TA2502	9940 000 00872	TACT SW 50MA 12V
TA2503	9940 000 00872	TACT SW 50MA 12V
TA2504	9940 000 00872	TACT SW 50MA 12V
TA2505	9940 000 00872	TACT SW 50MA 12V
TA2506	9940 000 00872	TACT SW 50MA 12V
TA2507	9940 000 00872	TACT SW 50MA 12V
TA2508	9940 000 00872	TACT SW 50MA 12V
TA2509	9940 000 00872	TACT SW 50MA 12V
TA2510	9940 000 00872	TACT SW 50MA 12V
TA2511	9940 000 00872	TACT SW 50MA 12V
TA2512	9940 000 00872	TACT SW 50MA 12V
TA2513	9940 000 00872	TACT SW 50MA 12V
TA2514	9940 000 00872	TACT SW 50MA 12V
TA2515	9940 000 00872	TACT SW 50MA 12V
TA2516	9940 000 00872	TACT SW 50MA 12V
TA2517	9940 000 00872	TACT SW 50MA 12V
TA2518	9940 000 00872	TACT SW 50MA 12V
TA2519	9940 000 00872	TACT SW 50MA 12V
TA2530	9940 000 00881	ENCODER
VR301	9940 000 01563	CNTL ROTARY 50KR
XL2501	9940 000 05352	X'TAL 4.194304MHZ -/ 10PPM
ZD2501	9965 000 38409	ZENER 6.8V 5% 0.5W
ZD2502	9965 000 38409	ZENER 6.8V 5% 0.5W
ZD2503	9940 000 05265	CHIP ZENER 3.9V 5% 0.5W

Note: Only these parts mentioned in the list are normal service parts.

5-6

ELECTRICAL PARTS LIST - KEY BOARD

TA280	9940 000 00872	TACT SW 50MA 12V
TA281	9940 000 00872	TACT SW 50MA 12V
TA282	9940 000 00872	TACT SW 50MA 12V
TA283	9940 000 00872	TACT SW 50MA 12V
TA284	9940 000 00872	TACT SW 50MA 12V

Note: Only these parts mentioned in the list are normal service parts.

ELECTRICAL PARTS LIST- SWITCH BOARD

SW801	9940 000 01556	DETECTOR SWITCH
SW802	9940 000 01556	DETECTOR SWITCH

Note: Only these parts mentioned in the list are normal service parts.

MAIN BOARD

TABLE OF CONTENTS

Internal IC Diagram 6-1
Voltage List 6-2
Circuit Diagram Servo 6-3
Circuit Diagram Amplifier 6-4
PCB Layout Top View 6-5
PCB Layout Bottom View 6-6
Electrical Parts List 6-7

6-1

ES8380 PHOENIX INTERNAL IC DIAGRAM

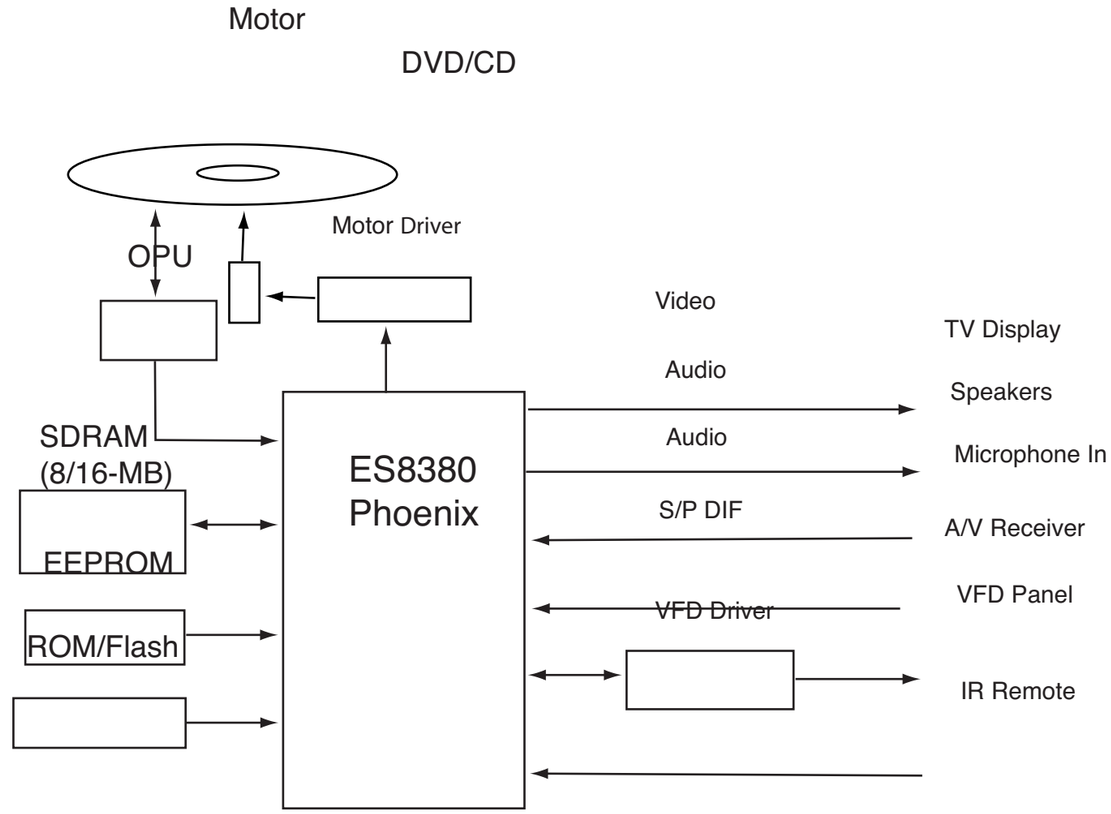

INTERNAL IC DIAGRAM-V5888S HSOP

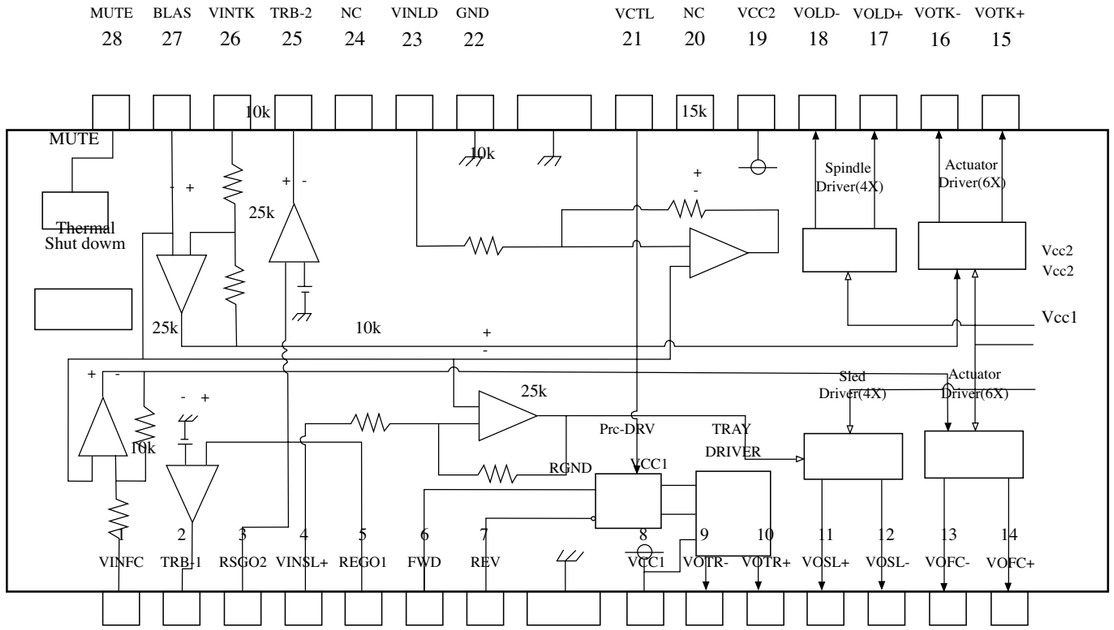

6-2

VOLTAGE

IC201

Pin NO	1	2	3	4	5	6	7	8	9	10	11	12	13	14	15	16	17
Voltage	3.40	1.52	0.80	0.04	1.66	0.41	0.46	0.03	0.00	3.40	0.15	0.14	0.02	0.16	1.15	3.06	1.42
Pin NO	21	22	23	24	25	26	27	28	29	30	31	32	33	34	35	36	37
Voltage	3.40	3.26	0.00	3.40	2.00	0.14	1.20	0.40	0.80	1.20	1.00	1.10	0.78	0.82	0.00	3.40	1.00
Pin NO	41	42	43	44	45	46	47	48	49	50	51	52	53	54	55	56	57
Voltage	1.02	1.92	1.76	0.00	3.40	0.00	0.00	2.87	1.46	2.42	2.12	0.00	3.40	1.34	1.20	1.64	3.38
Pin NO	61	62	63	64	65	66	67	68	69	70	71	72	73	74	75	76	77
Voltage	3.40	1.37	0.00	0.50	0.00	1.42	1.95	3.30	1.60	1.83	1.72	0.00	3.48	0.00	0.71	0.34	3.39
Pin NO	81	82	83	84	85	86	87	88	89	90	91	92	93	94	95	96	97
Voltage	0.00	0.81	0.81	0.65	2.60	1.42	1.57	1.74	3.48	0.00	0.73	1.95	2.23	2.28	2.29	0.00	0.00
Pin NO	101	102	103	104	105	106	107	108	109	110	111	112	113	114	115	116	117
Voltage	0.66	1.08	1.07	3.40	0.00	0.00	0.00	0.87	0.70	3.40	0.04	0.00	0.00	0.87	1.86	1.80	1.70
Pin NO	121	122	123	124	125	126	127	128	129	130	131	132	133	134	135	136	137
Voltage	1.70	1.32	1.61	3.29	1.66	1.44	0.00	3.50	3.50	0.02	0.35	0.35	3.40	1.67	3.43	0.00	3.37
Pin NO	141	142	143	144	145	146	147	148	149	150	151	152	153	154	155	156	157
Voltage	1.23	1.28	1.61	1.66	1.62	1.59	0.05	0.12	0.20	0.12	0.00	0.05	3.30	3.30	0.87	0.90	3.38
Pin NO	161	162	163	164	165	166	167	168	169	170	171	172	173	174	175	176	177
Voltage	2.03	2.03	2.03	2.03	2.03	2.03	2.03	2.03	1.56	3.36	1.62	1.62	1.61	1.62	2.07	2.44	0.00
Pin NO	181	182	183	184	185	186	187	188	189	190	191	192	193	194	195	196	197
Voltage	0.00	1.10	3.34	1.90	1.86	1.45	0.00	3.42	1.20	3.43	1.42	1.30	1.15	1.18	0.00	1.42	4.09
Pin NO	201	202	203	204	205	206	207	208									
Voltage	4.09	3.43	5.00	3.23	1.59	1.44	1.60	0.00									

IC101

Pin NO	1	2	3	4	5	6	7	8
Voltage	0.00	0.00	0.00	-11.95	0.00	0.00	0.00	13.32

IC202

Pin NO	1	2	3	4	5	6	7	8	9	10	11	12	13	14	15	16	17
Voltage	3.20	0.00	3.24	1.03	1.29	0.00	0.99	1.00	3.20	0.96	1.10	0.00	0.00	3.22	0.00	3.20	3.20
Pin NO	21	22	23	24	25	26	27	28	29	30	31	32	33	34	35	36	37
Voltage	0.00	0.14	0.00	0.00	0.00	1.50	3.20	0.00	1.51	1.48	1.61	0.00	0.00	0.04	0.13	0.00	0.00
Pin NO	41	42	43	44	45	46	47	48	49	50	51	52	53	54			
Voltage	0.00	1.10	3.23	1.07	1.10	0.00	0.90	0.74	3.20	1.10	1.12	0.00	1.60	0.00			

IC203

Pin NO	1	2	3	4	5	6	7	8	9	10	11	12	13	14	15	16	17
Voltage	0.00	2.23	1.00	2.12	1.30	1.50	1.90	0.00	0.00	3.20	3.30	3.20	3.20	3.20	1.23	0.00	0.00
Pin NO	21	22	23	24	25	26	27	28	29	30	31	32	33	34	35	36	37
Voltage	1.93	1.66	1.60	1.58	1.64	0.00	0.00	1.00	1.27	1.38	1.17	1.20	1.22	1.00	1.13	3.20	1.30
Pin NO	41	42	43	44	45	46	47	48									
Voltage	1.40	1.29	1.80	0.00	1.60	0.00	0.00	0.00									

IC204

Pin NO	1	2	3	4	5	6	7	8
Voltage	0	0	0	0	3.23	3.23	0	3.24

IC205

Pin NO	1	2	3
Voltage	0	3.24	3.23

IC207

Pin NO	1	2	3	4	5	6	7	8	9	10	11	12	13	14
Voltage	1.38	2.87	1.35	3.07	1.34	3.19	0.00	1.75	0.85	3.20	0.00	3.20	0.00	3.20

IC211

Pin NO	1	2	3	4	5	6	7	8	9	10	11	12	13	14	15	16	17
Voltage	0.00	0.12	1.07	1.38	4.96	0.12	1.24	0.91	3.75	0.00	4.75	0.12	1.32	1.80	3.90	4.07	1.32

IC212

Pin NO	1	2	3	4	5	6	7	8	9	10	11	12	13	14	15	16	17
Voltage	0.00	0.13	1.07	1.40	0.00	3.70	1.25	0.89	4.30	0.00	4.41	3.70	1.35	1.79	3.37	3.37	1.39

IC213

Pin NO	1	2	3	4	5	6	7	8	9	10	11	12	13	14	15	16	17
Voltage	0.05	0.13	1.04	1.38	0.13	3.68	1.20	0.92	0.13	0.00	4.40	3.51	1.35	1.72	3.51	3.51	1.34

IC220

Pin NO	1	2	3	4	5	6	7	8	9	10	11	12	13	14	15	16	17
Voltage	4.43	0.06	1.48	0.06	1.32	0.03	1.80	0.05	1.38	0.00	4.89	0.80	0.08	1.20	4.93	1.37	4.98

IC221

IC501

Pin NO	1	2	3	4	5	6	7	8
Voltage	0.00	0.00	0.00	-11.95	0.00	0.00	0.00	13.34

IC502

Pin NO	1	2	3	4	5	6	7	8
Voltage	2.29	4.97	3.22	0.00	5.00	2.30	2.30	2.30

IC5201

Pin NO	1	2	3	4	5	6	7	8	9	10	11	12	13	14	15	16	17
Voltage	12.41	3.57	3.57	1.62	4.96	0.08	1.05	0.01	0.01	3.37	0.01	3.37	3.37	0.08	4.96	0.08	12.43
Pin NO	21	22	23	24	25	26	27	28	29	30	31	32	33	34	35	36	
Voltage	29.50	14.80	0.00	0.00	14.70	29.00	26.00	25.80	28.70	14.00	0.00	0.00	13.50	0.00	24.90	12.38	

IC701

Pin NO	1	2	3	4	5	6	7	8	9	10	11	12	13	14	15	16
Voltage	0.00	0.00	0.00	-9.39	0.00	0.00	4.45	0.00	0.00	0.60	0.00	0.00	7.94	0.00	0.00	0.00

IC702

Pin NO	1	2	3	4	5	6	7	8	9	10	11	12	13	14	15	16
Voltage	0.00	0.00	0.00	6.00	0.00	1.31	0.07	0.00	0.00	0.08	1.31	10.95	5.83	0.00	11.68	11.73

IC703

Pin NO	1	2	3	4	5	6	7	8	9	10	11	12	13	14	15	16
Voltage	0.00	0.00	0.00	-9.39	0.00	0.00	0.40	0.00	4.90	0.00	0.00	0.00	7.94	0.00	0.00	0.00

IC704

Pin NO	1	2	3	4	5	6	7	8	9	10	11	12	13	14	15	16
Voltage	0.00	0.00	0.00	-9.39	0.00	0.00	4.97	0.00	0.00	0.00	0.00	0.00	7.94	0.00	0.00	0.00

IC705

Pin NO	1	2	3	4	5	6	7	8	9	10	11	12	13	14	15	16
Voltage	0.00	3.68	0.13	4.90	4.45	0.00	4.94	0.00	0.00	0.00	0.00	0.00	4.98	0.00	4.98	4.98

IC801

Pin NO	1	2	3	4	5	6	7	8	9	10	11	12	13	14	15	16	17
Voltage	1.59	0.00	1.23	0.00	1.23	0.00	0.00	4.78	0.00	0.00	2.26	2.30	2.20	2.36	2.30	2.30	1.35
Pin NO	21	22	23	24	25	26	27	28									
Voltage	4.78	0.00	0.00	0.00	1.77	1.57	1.57	2.51									

IC804

Pin NO	1	2	3	4	5	6	7	8
Voltage	0.01	9.30	4.78	3.50	3.50	4.80	0.00	0.00

IC805

Pin NO	1	2	3	4	5	6	7	8
Voltage	0.01	9.30	4.78	3.52	3.52	4.79	0.01	0.00

Q101

Pin NO	1	2	3
Voltage	12.41	12.42	13.21

Q202

Pin NO	1	2	3
Voltage	2.45	1.50	1.79

Q201

Pin NO	1	2	3
Voltage	0.52	4.74	0.00

Q203

Pin NO	1	2	3
Voltage	3.39	3.25	4.05

Q3001

Pin NO	1	2	3
Voltage	0.00	13.16	0.00

Q3002

Pin NO	1	2	3
Voltage	13.25	0.09	13.23

Q3003

Q3009

Pin NO	1	2	3
Voltage	0.00	0.00	0.13

Q301

Pin NO	1	2	3
Voltage	0.00	0.00	0.00

Q3013

Pin NO	1	2	3
Voltage	0.68	0.01	0.00

Q3020

Pin NO	1	2	3
Voltage	0.00	4.93	0.22

Q304

Pin NO	1	2	3
Voltage	1.66	13.23	1.19

Q501

Pin NO	1	2	3
Voltage	0.18	5.00	0.00

Q502

Q705

Pin NO	1	2	3
Voltage	0.00	0.08	0.08

Q706

Pin NO	1	2	3
Voltage	0.00	0.02	0.64

Q707

Pin NO	1	2	3
Voltage	0.60	0.05	0.00

Q708

Pin NO	1	2	3
Voltage	0.70	0.00	0.00

Q709

Pin NO	1	2	3
Voltage	0.00	5.00	0.00

Q710

Pin NO	1	2	3
Voltage	13.36	2.59	13.38

Q711

Q801

Pin NO	1	2
Voltage	9.30	13.30

Q805

Pin NO	1	2
Voltage	3.23	0.06

Q806

Pin NO	1	2
Voltage	2.02	1.88

Q408

Pin NO	1	2
Voltage	0.60	0.05

Q409

Pin NO	1	2
Voltage	0.60	0.07

Q450

Pin NO	1	2
Voltage	0.60	0.09

Q451

6-3

CIRCUIT DIAGRAM -MAIN SERVO

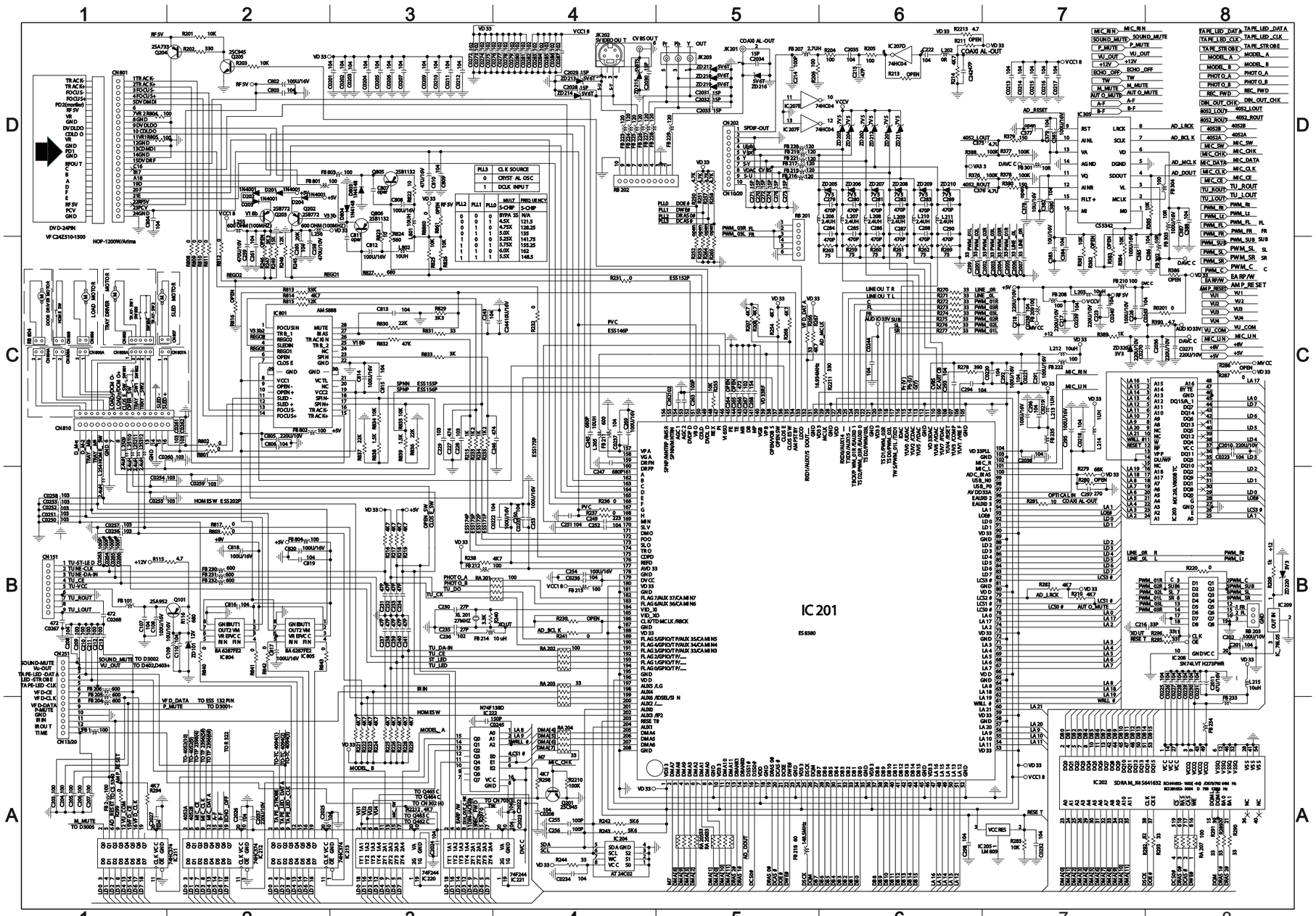

6-4

CIRCUIT DIAGRAM - MAIN AMPLIFIER

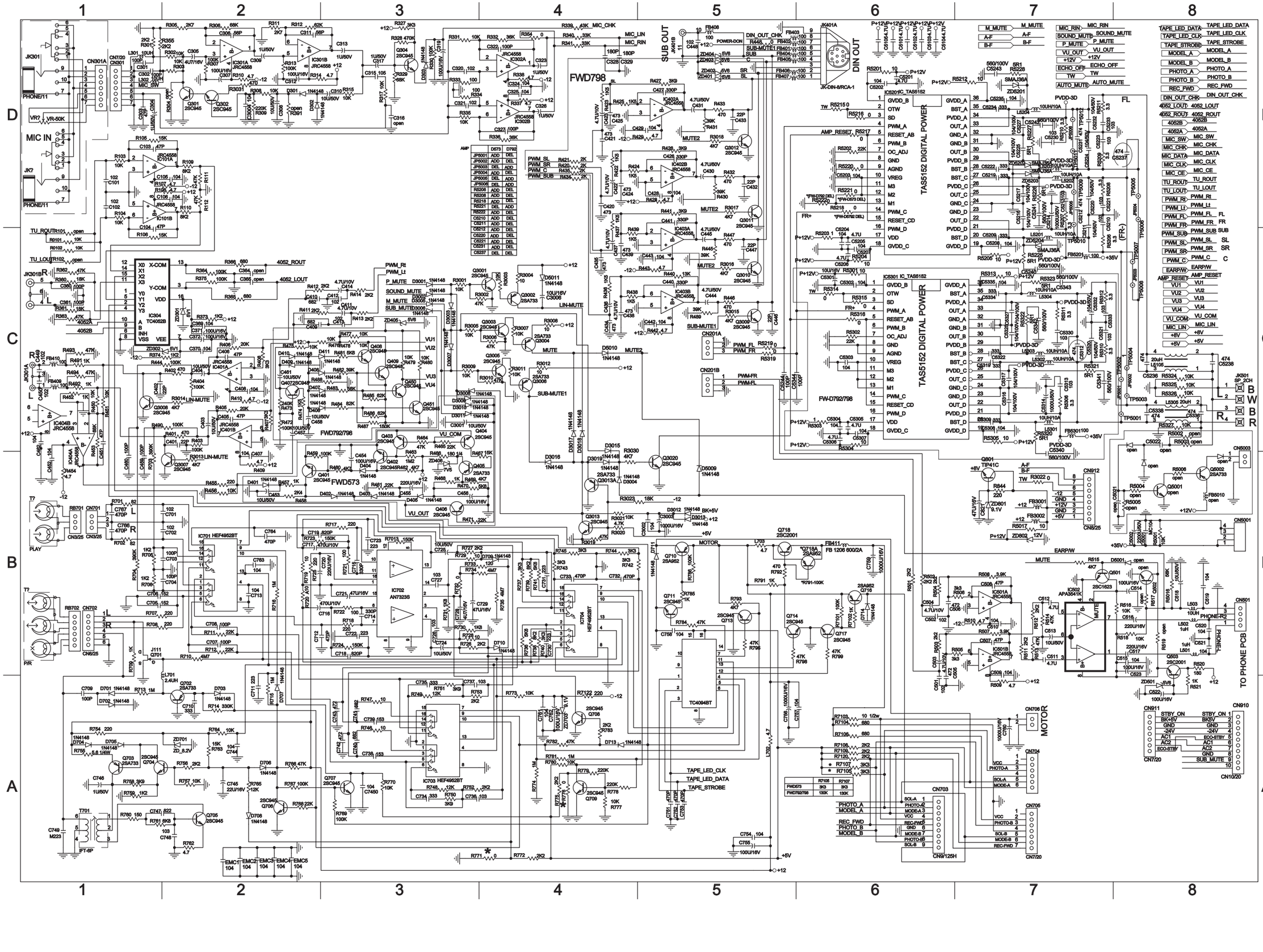

PCB LAYOUT: MAIN (TOP) VIEW

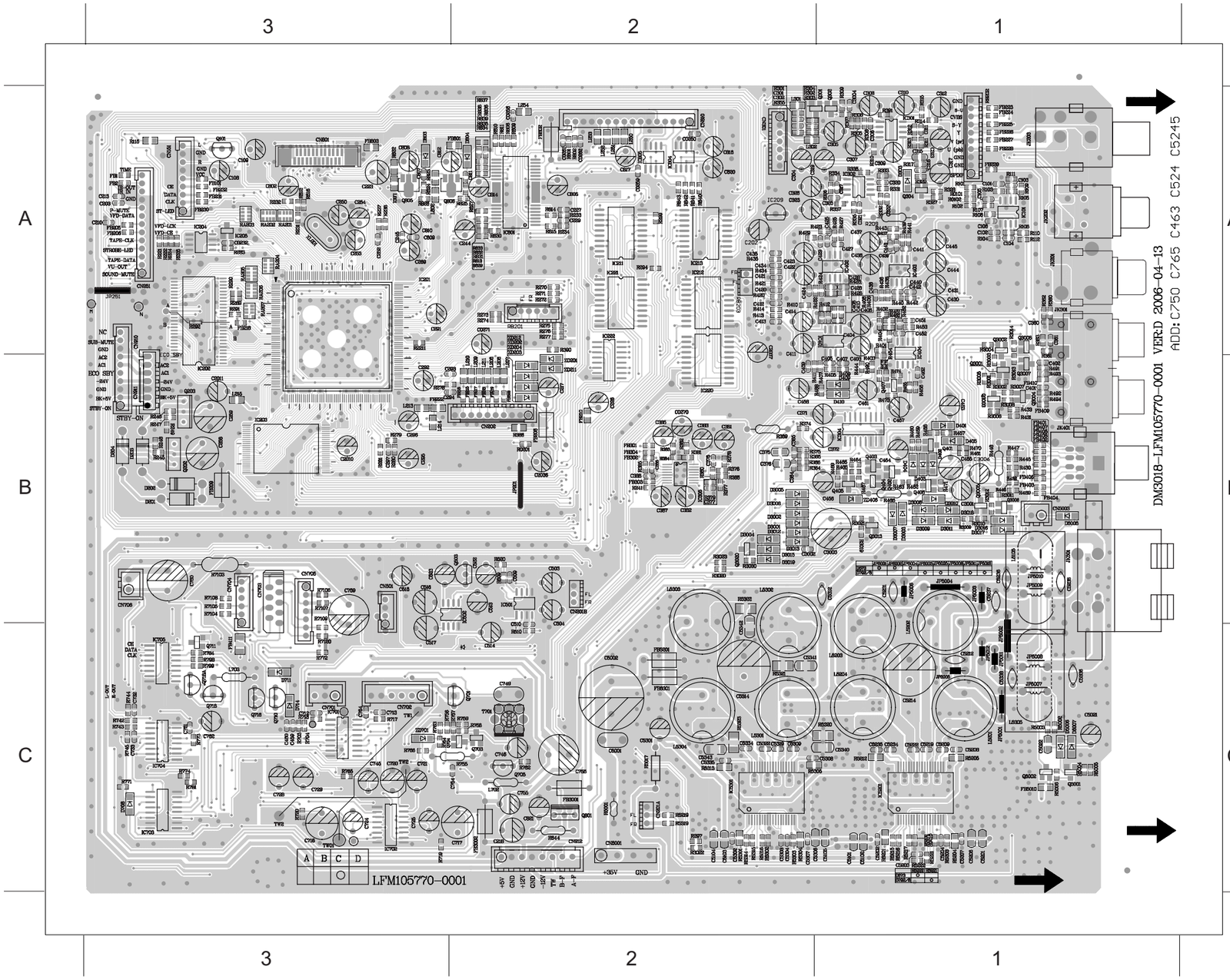

6-5

C0232	A3	C414	A2	C812	A3	IC213	A2	R103	A1	R366	B1	R743	C3
C0250	A2	C434	A2	C814	A2	IC220	B2	R104	A1	R374	B2	R744	C3
C0258	A2	C436	A1	C817	A2	IC221	A2	R105	A1	R375	B1	R745	C3
C0259	A2	C438	A1	C818	A2	IC222	A2	R106	A1	R376	B2	R754	C3
C0261	A2	C439	A1	C820	A2	IC301	A1	R107	A1	R377	B2	R755	C2
C0262	A2	C440	A1	C821	C2	IC302	A1	R108	A1	R378	B2	R756	C3
C0270	B2	C442	A1	CN151	A3	IC304	B1	R109	A1	R379	B2	R757	C2
C0271	A2	C443	A1	CN251	A3	IC305	B2	R110	A1	R380	B2	R758	C2
C101	A1	C444	A1	CN301	A2	IC401	A1	R111	A1	R381	B2	R759	C2
C102	A1	C451	A1	CN501	B3	IC403	A1	R112	A1	R384	B2	R762	C2
C103	A1	C452	A1	CN701	C3	IC404	A1	R115	A3	R385	B2	R763	C3
C104	A1	C453	B1	CN702	C3	IC501	B2	R209	A1	R386	B2	R765	C3
C105	A1	C454	B1	CN704	B3	IC502	B2	R221	A3	R388	B2	R766	C3
C106	A1	C455	B1	CN705	B3	IC5201	C1	R2211	A3	R390	B2	R771	C3
C108	A3	C456	B1	CN706	B3	IC5301	C2	R222	A3	R401	A1	R772	C3
C109	A3	C457	B1	CN801	A3	IC701	C3	R224	A3	R402	A1	R773	C3
C2010	B3	C458	B2	CN810	A2	IC702	C3	R225	A3	R403	B1	R774	C3
C2011	B3	C459	C3	CN910	A3	IC703	C3	R231	A3	R404	A1	R781	C3
C202	A2	C460	C3	D201	B3	IC704	C3	R232	A3	R405	B1	R784	C3
C203	A3	C461	B1	D202	B3	IC705	C3	R233	A2	R406	B1	R798	C3
C2036	B2	C462	B1	D203	B3	IC801	A2	R234	A2	R407	B2	R799	C3
C2037	A2	C5001	C2	D204	B3	IC804	A2	R236	A3	R408	A1	R801	A2
C210	A3	C5002	C2	D3001	B2	IC805	A2	R237	A3	R409	B1	R802	A2
C213	A3	C5021	C1	D3002	B2	JK201	A1	R241	B2	R410	A2	R808	A2
C217	B2	C503	B2	D3003	B1	JK202	A1	R245	B3	R411	B2	R809	A2
C218	C2	C504	B2	D3004	B2	JK203	A1	R247	B3	R412	A1	R810	A2
C223	A3	C509	B2	D3005	B2	JK301	A1	R248	B3	R413	A2	R811	A2
C226	B2	C510	C2	D3006	B2	JK401	B1	R249	B3	R414	A2	R812	A3
C227	A2	C5101	C1	D3007	B1	JK501	B1	R270	A2	R434	A2	R813	A3
C229	A2	C5102	C1	D3008	B1	JP201	B2	R271	A2	R436	A1	R814	A2
C244	A3	C5103	C2	D3009	B1	JP251	A3	R272	A2	R438	A1	R815	A2
C245	A3	C5104	C2	D3012	B2	JP5003	B1	R273	A2	R440	A1	R822	A3
C250	A3	C5105	C1	D3013	B2	JP5005	C1	R274	A2	R442	A1	R823	A3
C252	A3	C513	B2	D3015	B2	JP5006	B1	R275	A2	R443	A1	R824	A3
C253	A3	C514	C2	D3016	B1	JP5011	C1	R276	A2	R444	B1	R825	A2
C254	A2	C516	B3	D3017	B1	JP5012	C1	R277	A2	R446	B1	R826	A3
C258	B3	C517	C3	D3018	B1	L206	B2	R278	B3	R450	A1	R827	A2
C259	B3	C518	B3	D3019	B2	L207	B2	R279	B3	R451	A1	R829	A3
C269	A3	C5202	C1	D303	A1	L208	B2	R281	B3	R452	A1	R830	A3
C291	A3	C5203	C1	D403	B1	L209	B2	R283	A3	R453	A1	R831	A4
C292	B3	C5204	C1	D404	B1	L210	B2	R289	A3	R454	A1	R832	A5
C293	B3	C5206	C1	D405	B1	L211	B2	R290	A3	R455	B1	R833	A6
C294	B3	C5207	C1	D409	B1	L213	B3	R291	A3	R456	B1	R834	A2
C295	B3	C5208	C1	D410	B1	L214	B3	R292	A3	R471	B1	R835	A2
C296	B3	C5209	C1	D708	C3	L215	B3	R294	A2	R472	B1	R836	A2
C297	B3	C5214	C1	D711	C3	L250	A2	R297	C2	R473	B1	R837	A2
C3001	B1	C5219	C1	D714	C3	L251	A2	R3001	B1	R474	B1	R838	A2
C3002	B2	C522	B2	D803	A3	L252	A2	R3002	B1	R475	B1	R839	A2
C3003	B1	C5222	C1	D804	A2	L253	A2	R3003	B1	R484	B1	R840	A2
C3006	B1	C523	B3	FB1	A3	L254	A2	R3004	A1	R489	B1	R841	A2
C301	A2	C5234	C1	FB101	A3	L301	A2	R3005	B1	R490	B1	R842	A2
C302	A2	C5235	C1	FB2	A3	L302	A2	R3006	B1	R491	B1	R843	A2
C304	A2	C5236	C1	FB205	A3	L5105	B1	R3007	B1	R492	B1	R844	C2
C305	A1	C5238	B1	FB206	A3	L5201	C1	R3008	B1	R493	B1	RA201	A3
C306	A1	C5301	C2	FB208	B2	L5202	C1	R3009	B1	R494	B1	RA202	A3
C307	A1	C5302	C2	FB209	B3	L5203	C1	R301	A2	R5001	C2	RA203	A3
C308	A1	C5303	C2	FB210	B2	L5204	C1	R3010	B1	R5017	C2	RA204	A3
C309	A1	C5304	C2	FB215	B2	L5301	C2	R3011	B1	R510	C2	RA205	A3
C310	A1	C5306	C1	FB216	B2	L5302	B2	R3012	B1	R520	B2	RA206	A3
C311	A1	C5307	C2	FB217	B2	L5303	B2	R3013	B1	R5201	C1	RA207	A3
C312	A1	C5308	C1	FB218	A3	L5304	C2	R3014	A1	R5202	C1	RB201	A2
C313	A1	C5309	C2	FB219	B2	L5305	C1	R3019	B1	R5203	C1	RB203	A2
C315	A1	C5314	C2	FB220	B2	L702	C2	R302	A2	R5204	C1	T701	C2
C317	A1	C5319	C2	FB221	B2	L703	C3	R3020	B2	R5205	C1	XL201	A3
C319	A2	C5322	C2	FB222	B3	L801	A3	R3021	B1	R5212	C1	ZD201	B2
C320	A1	C5334	C2	FB223	A1	L802	A3	R3022	C2	R5215	C1	ZD202	B2
C321	A1	C5335	C2	FB224	A1	Q101	A3	R3023	B2	R5216	C1	ZD203	B2
C322	A1	C5336	C1	FB225	A1	Q202	B3	R303	A2	R5217	C1	ZD204	B2
C323	A2	C5338	C1	FB226	A1	Q203	B3	R3030	B2	R5219	C2	ZD212	B2
C325	A1	C5340	C1	FB227	A1	Q3001	B1	R305	A1	R5221	C1	ZD701	C2
C326	A2	C5341	C2	FB228	A1	Q3002	A1	R306	A1	R5301	C2		
C327	A1	C5342	C2	FB229	A1	Q3003	B1	R307	A1	R5302	C2		
C360	A1	C5343	C2	FB230	A3	Q3004	B1	R308	A1	R5303	C2		
C361	A1	C712	C3	FB231	A3	Q3005	B1	R309	A1	R5304	C2		
C371	B2	C713	C3	FB232	A3	Q3006	B1	R310	A1	R5305	C1		
C372	B1	C716	C3	FB3001	C2	Q3007	B1	R311	A1	R5313	C2		
C375	B2	C717	C2	FB3002	C2	Q3008	A1	R312	A1	R5314	C2		
C376	B2	C720	C3	FB301	B2	Q301	A2	R313	A1	R5315	C2		
C381	A1	C721	C3	FB302	B2	Q3013	B1	R314	A1	R5316	C2		
C382	B2	C725	C3	FB303	B2	Q302	A1	R315	A1	R5319	C2		
C383	B2	C728	C3	FB304	B2	Q3020	B2	R317	A1	R5320	C2		
C384	B2	C729	C3	FB408	B1	Q304	A1	R327	A1	R5321	C2		
C385	B2	C732	C3	FB409	B1	Q401	B1	R328	A1	R5322	B2		
C386	B2	C733	C3	FB410	B1	Q407	B1	R329	A1	R5323	C2		
C387	B2	C745	C3	FB411	C3	Q503	B3	R331	A1	R703	C3		
C388	B2	C746	C2	FB5201	C2	Q701	C2	R332	A1	R704	C3		
C401	B1	C749	C2	FB5301	C2	Q703	C2	R333	A1	R7103	B3		
C402	B1	C754	C2	FB801	A2	Q704	C3	R334	A1	R7104	B3		
C403	B1	C755	C2	FB802	A2	Q705	C2	R335	A1	R7105	B3		
C404	A1	C756	C2	FB803	A3	Q710	C3	R336	A1	R7106	B3		
C405	B1	C759	B3	IC101	A1	Q711	C3	R337	A1	R7107	B3		
C406	A1	C760	B3	IC201	A3	Q716	C3	R338	A1	R7108	B3		
C407	B1	C761	C3	IC202	A3	Q718	C3	R355	A2	R7109	B3		
C408	A1	C762	C3	IC203	B3	Q801	C2	R360	A1	R7120	C3		
C409	B2	C764	C3	IC204	A3	Q805	A3	R361	A1	R717	C3		
C410	A1	C802	A3	IC205	A3	Q806	A3	R362	A1	R718	C3		
C411	A2	C808	A3	IC209	A2	R0101	A1	R363	A1	R719	C3		
C412	A2	C809	A3	IC211	A2	R0102	A1	R364	B1	R720	C3		
C413	A2	C810	A3	IC212	A2	R0201	B2	R365	B1	R742	C3		

PCB LAYOUT MAIN (BOTTOM) VIEW

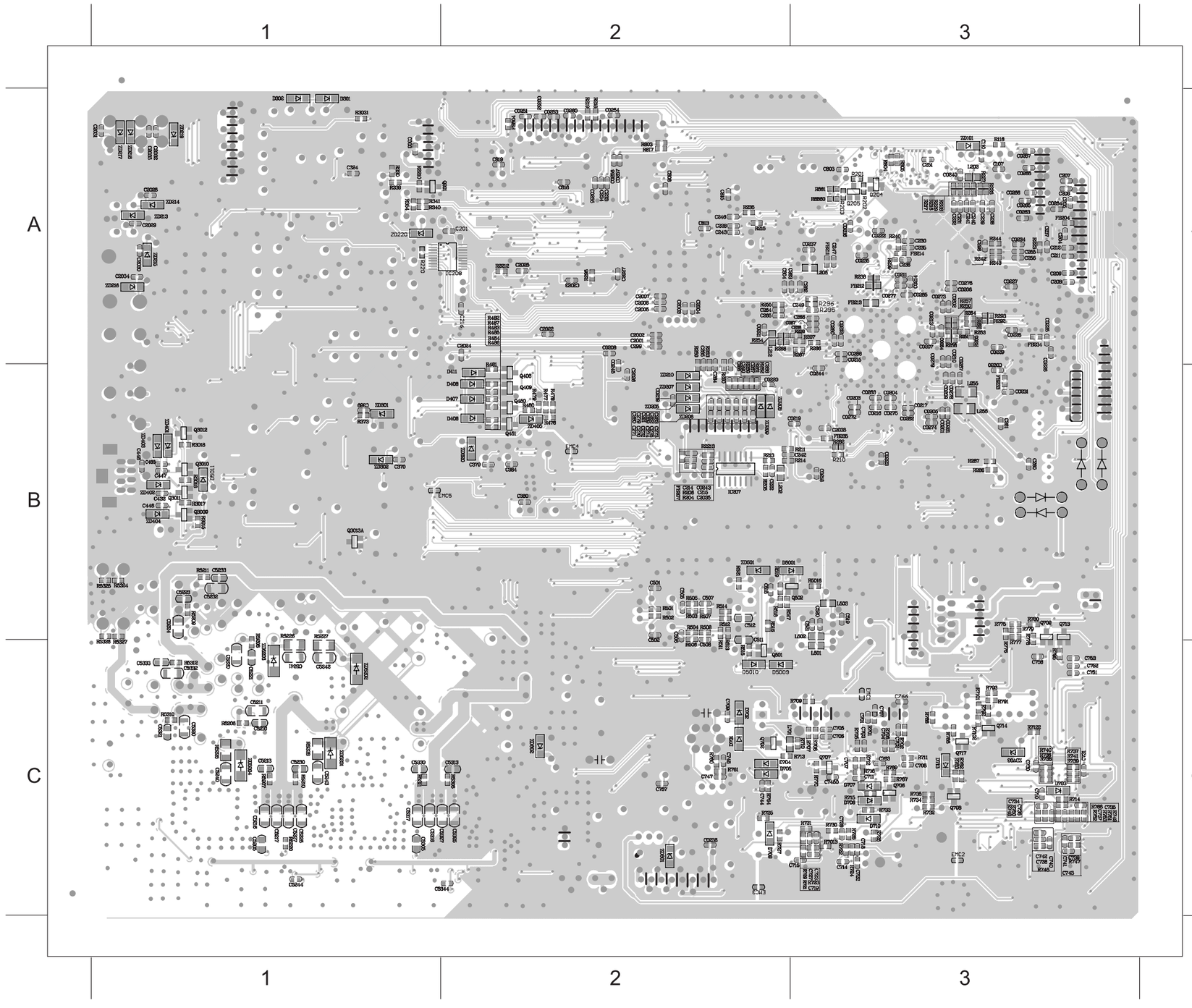

6-6

C0201	B3	C231	A3	C703	C3	Q409	B2	R517	B2	ZD210	B2
C0202	A3	C232	A3	C704	C3	Q450	B2	R518	B2	ZD211	B2
C0204	B3	C233	A2	C705	C3	Q451	B2	R5206	C1	ZD213	A1
C0205	B3	C234	A2	C706	C3	Q501	C2	R5207	C1	ZD214	A1
C0206	A3	C235	A3	C707	C3	Q502	B2	R521	B2	ZD215	A1
C0207	A3	C236	A3	C708	C3	Q702	C2	R5210	C1	ZD216	A1
C0209	B3	C237	A3	C709	C2	Q706	C3	R5211	B1	ZD217	A1
C0210	A3	C238	A3	C710	C3	Q707	C3	R5220	C1	ZD218	A1
C0211	A3	C239	A3	C711	C3	Q708	C3	R5225	C1	ZD219	A1
C0212	A3	C240	A3	C714	C3	Q709	B3	R5226	C1	ZD220	A1
C0213	A3	C241	A3	C715	C3	Q713	B3	R5227	C1	ZD301	B1
C0214	A3	C242	B2	C718	C3	Q714	C3	R5228	C1	ZD302	B1
C0215	A3	C243	A2	C719	C3	Q717	C3	R5306	C2	ZD320	B2
C0216	B3	C246	A2	C722	C3	R116	A3	R5310	C1	ZD405	B2
C0217	B3	C247	A3	C723	C3	R201	A3	R5311	C1	ZD406	B2
C0218	B3	C249	A3	C724	C3	R202	A3	R5312	C1	ZD501	B2
C0219	B2	C251	A3	C726	C3	R203	A3	R5324	B1	ZD703	C3
C0220	B2	C255	A3	C727	C3	R204	B2	R5325	B1	ZD801	C2
C0221	A2	C256	A3	C730	C3	R205	B2	R5326	B1	ZD802	C2
C0222	A3	C260	B3	C731	C3	R206	B2	R5327	B1		
C0223	B3	C261	B3	C734	C3	R207	A3	R701	C3		
C0225	A3	C262	A3	C735	C3	R208	A3	R7013	C3		
C0226	A3	C263	A2	C736	C3	R210	B3	R702	C3		
C0227	A3	C266	A3	C737	C3	R214	B2	R705	C3		
C0228	A3	C267	A3	C738	C3	R215	A2	R706	C3		
C0229	A3	C268	A3	C739	C3	R216	A3	R707	C3		
C0230	B3	C270	B2	C740	C3	R217	A3	R708	C3		
C0231	B3	C271	B2	C741	C3	R218	A2	R709	C3		
C0234	A3	C272	B2	C742	C3	R219	A2	R710	C3		
C0235	A3	C273	B2	C743	C3	R2210	A1	R7101	C3		
C0236	A3	C274	B2	C744	C2	R2212	A2	R7102	C3		
C0237	A3	C278	B2	C7450	C3	R2213	B2	R711	C3		
C0238	C2	C279	B2	C747	C2	R223	A3	R712	C3		
C0239	B2	C280	B2	C748	C2	R226	A3	R7122	C3		
C0240	A3	C281	B2	C751	C3	R227	A3	R713	C2		
C0243	B2	C282	B2	C752	C3	R228	A3	R714	C3		
C0244	B3	C283	B2	C753	C3	R229	A3	R715	C3		
C0251	A2	C284	B2	C757	C2	R235	A2	R716	C3		
C0252	A2	C285	B2	C758	C3	R238	A3	R721	C3		
C0253	A2	C286	B2	C763	C3	R240	A3	R722	C3		
C0254	A2	C287	B2	C766	C3	R242	A3	R723	C3		
C0255	A2	C288	B2	C767	C3	R243	A3	R724	C3		
C0256	A2	C289	B2	C803	A3	R244	A3	R725	C2		
C0257	A2	C290	B2	C804	A2	R250	A3	R726	C2		
C0267	A3	C298	A3	C805	A2	R251	A3	R727	C2		
C0268	A3	C299	A2	C806	A2	R254	A2	R728	C3		
C0272	B3	C303	A1	C813	A2	R255	A2	R729	C3		
C0273	A3	C324	A1	C815	A2	R257	A3	R730	C3		
C0274	B3	C328	A1	C816	A2	R258	A3	R731	C3		
C0275	B3	C329	A1	C819	A2	R259	B2	R732	C3		
C0276	A3	C369	B1	D301	A1	R260	B2	R733	C3		
C0277	A3	C370	B1	D302	A1	R261	B2	R734	C3		
C0278	B3	C379	B2	D406	B2	R262	B2	R735	C3		
C0279	A3	C380	B2	D407	B2	R263	B2	R736	C3		
C0280	A3	C446	B1	D408	B2	R266	A3	R737	C3		
C0281	B3	C448	B1	D411	B2	R267	A3	R738	C3		
C0282	B3	C501	B2	D5009	C2	R268	A3	R739	C3		
C0283	B3	C502	B2	D5010	C2	R269	B2	R740	C3		
C0284	A3	C505	B2	D5011	B1	R282	B3	R741	C3		
C0285	A3	C506	B2	D701	C2	R287	B3	R746	C3		
C0286	A3	C507	B2	D702	C2	R293	A3	R747	C3		
C107	A3	C508	B2	D703	C3	R295	A3	R748	C3		
C110	A3	C511	B2	D704	C2	R296	A3	R749	C3		
C2001	A2	C512	B2	D705	C2	R298	A2	R750	C3		
C2002	A2	C515	B2	D706	C3	R3015	B1	R751	C3		
C2003	A2	C519	B3	D707	C3	R3031	A1	R752	C3		
C2004	A2	C520	B3	D709	C2	R330	A1	R753	C3		
C2005	A2	C5205	B3	D710	C3	R339	A1	R760	C2		
C2006	A2	C521	B3	D713	C3	R340	A1	R761	C2		
C2007	A2	C5211	C1	FB204	A3	R341	A1	R764	C2		
C201	A2	C5213	C1	FB207	B2	R354	A1	R767	C3		
C2022	A2	C5216	C1	FB211	A3	R373	B1	R768	C3		
C2023	A2	C5217	C1	FB212	A3	R476	B2	R769	C3		
C2024	A2	C5223	B1	FB213	A3	R477	B2	R770	C3		
C2025	A2	C5224	B1	FB214	A3	R478	B2	R775	B3		
C2026	B2	C5225	C1	FB233	B3	R479	B2	R776	B3		
C2027	A2	C5227	C1	FB234	B3	R480	B2	R777	B3		
C2028	A1	C5230	C1	FB235	B3	R481	B2	R778	B3		
C2029	A1	C5232	B1	FB804	A2	R482	A2	R779	B3		
C2030	A1	C5233	B1	IC207	B2	R483	A2	R780	B3		
C2031	A1	C5240	C1	IC208	A2	R485	A2	R782	C3		
C2032	A1	C5241	C1	L202	B2	R486	A2	R783	C3		
C2033	A1	C5242	C1	L203	A3	R487	A2	R785	C3		
C2034	A1	C5243	C1	L205	A3	R501	B2	R786	C3		
C2035	B2	C5244	C1	L212	A2	R5016	B3	R791	C3		
C2038	B3	C5305	C1	L255	B3	R502	B2	R792	C3		
C204	A3	C5313	C2	L256	B3	R503	B2	R793	C3		
C205	A3	C5316	C1	L501	C3	R504	B2	R795	C3		
C206	A3	C5317	C1	L502	C3	R505	B2	R803	A2		
C207	A3	C5320	C1	L503	B3	R506	B2	R804	A3		
C208	A3	C5321	C1	L701	C2	R507	B2	R805	A3		
C209	A3	C5325	C2	Q201	A2	R508	B2	R817	A2		
C211	A3	C5327	C2	Q204	A3	R509	B2	R8860	A3		
C212	A3	C5330	C1	Q205	A3	R511	B2	ZD101	A3		
C214	B2	C5332	C1	Q3009	B1	R512	B2	ZD205	B2		
C215	B2	C5333	C1	Q3010	B1	R513	B2	ZD206	B2		
C222	B2	C5344	C2	Q3011	B1	R514	B2	ZD207	B2		
C228	A2	C701	C3	Q3012	B1	R515	B2	ZD208	B2		
C230	A3	C702	C3	Q408	B2	R516	B2	ZD209	B2		

6-7

ELECTRICAL PARTS LIST - MAIN BOARD

ELECTRICAL PARTS LIST - MAIN BOARD

IC101	9965 000 29611	IC 8P CO4558A CERAMATE	L5304	9940 000 05332	IND. 10UH/10A 20%	Q801	9940 000 05335	XISTR NPN TIP41C
IC201	9940 000 05336	IC 208P ES8380FCD PQFP	L5305	9940 000 05331	TOROID COIL 10UH 5A 300R 4P	Q805	9965 000 26927	XISTR PNP 2SB1132RT100
IC202	9940 000 00831	IC 54P K4S641632H-UC75	Q101	4822 130 41651	2SC2001L	Q806	9965 000 26927	XISTR PNP 2SB1132RT100
IC203	9965 000 38423	IC 48P MX29LV160BBTC-70G W/SW	Q201	9940 000 00915	XISTR NPN 2SC1623	RA201	9940 000 05229	RES.ARRAY 100R 1/16W 5%
IC204	9940 000 00833	IC 8P M24C04-WMN6T EEPROM	Q202	9965 000 26946	XISTR PNP 2SB772P/Q	RA202	9940 000 05229	RES.ARRAY 100R 1/16W 5%
IC205	9940 000 05209	IC 3P AZ809NSTR-E1 SOT23	Q203	9965 000 26946	XISTR PNP 2SB772P/Q	RA203	9940 000 05229	RES.ARRAY 100R 1/16W 5%
IC207	9965 000 23948	IC 14PIN 74HCU04D PHILIPS	Q3001	9940 000 00915	XISTR NPN 2SC1623	RA204	9940 000 05229	RES.ARRAY 100R 1/16W 5%
IC211	9940 000 00835	IC 20PIN 74F374D	Q3002	9940 000 00921	XISTR PNP 2SA812 HFE:200-400	RA205	9940 000 05229	RES.ARRAY 100R 1/16W 5%
IC212	9940 000 00835	IC 20PIN 74F374D	Q3003	9940 000 00915	XISTR NPN 2SC1623	RA206	9940 000 05229	RES.ARRAY 100R 1/16W 5%
IC213	9940 000 00835	IC 20PIN 74F374D	Q3004	9940 000 00921	XISTR PNP 2SA812 HFE:200-400	RA207	9940 000 05229	RES.ARRAY 100R 1/16W 5%
IC220	9940 000 00838	IC 20PIN 74F244	Q3005	9940 000 00915	XISTR NPN 2SC1623	T701	9940 000 00866	OSC COIL REC 3MH
IC221	9940 000 00838	IC 20PIN 74F244	Q3006	9940 000 00921	XISTR PNP 2SA812 HFE:200-400	XL201	9940 000 05201	X'TAL 27MHZ /-20PPM H=3.5MM
IC222	9940 000 00839	IC 16PIN 74F138D	Q3007	9940 000 00915	XISTR NPN 2SC1623	ZD101	9940 000 05334	ZENER ZMM5242B 500MW 12V 5%
IC301	9965 000 29611	IC 8P CO4558A	Q3008	9940 000 00915	XISTR NPN 2SC1623	ZD201	9965 000 26931	CHIP ZENER 7.5V 0.05 0.5W (F1)
IC302	9965 000 29611	IC 8P CO4558A	Q3009	9940 000 00915	XISTR NPN 2SC1623	ZD202	9965 000 26931	CHIP ZENER 7.5V 0.05 0.5W (F1)
IC304	9940 000 00841	IC 16PIN TC4052BFN	Q301	9940 000 00915	XISTR NPN 2SC1623	ZD203	9965 000 26931	CHIP ZENER 7.5V 0.05 0.5W (F1)
IC305	9940 000 05338	IC 16P CS5342-CZZ	Q3013	9940 000 00915	XISTR NPN 2SC1623	ZD204	9965 000 26931	CHIP ZENER 7.5V 0.05 0.5W (F1)
IC401	9965 000 29611	IC 8P CO4558A	Q3020	9940 000 00915	XISTR NPN 2SC1623	ZD205	9965 000 26931	CHIP ZENER 7.5V 0.05 0.5W (F1)
IC403	9965 000 29611	IC 8P CO4558A	Q304	9940 000 00915	XISTR NPN 2SC1623	ZD206	9965 000 26931	CHIP ZENER 7.5V 0.05 0.5W (F1)
IC404	9965 000 29611	IC 8P CO4558A	Q401	9940 000 00915	XISTR NPN 2SC1623	ZD207	9965 000 26931	CHIP ZENER 7.5V 0.05 0.5W (F1)
IC501	9965 000 29611	IC 8P CO4558A	Q407	9940 000 00915	XISTR NPN 2SC1623	ZD208	9965 000 26931	CHIP ZENER 7.5V 0.05 0.5W (F1)
IC502	9965 000 26923	IC 8P APA3541-TRL HEADPHONE	Q408	9940 000 00915	XISTR NPN 2SC1623	ZD209	9965 000 26931	CHIP ZENER 7.5V 0.05 0.5W (F1)
IC5201	9940 000 05339	IC 36P TAS5152DKDR	Q409	9940 000 00915	XISTR NPN 2SC1623	ZD210	9965 000 26931	CHIP ZENER 7.5V 0.05 0.5W (F1)
IC5301	9940 000 05339	IC 36P TAS5152DKDR	Q450	9940 000 00915	XISTR NPN 2SC1623	ZD211	9965 000 26931	CHIP ZENER 7.5V 0.05 0.5W (F1)
IC701	4822 209 32919	HEF4952BT	Q451	9940 000 00915	XISTR NPN 2SC1623	ZD212	9965 000 26931	CHIP ZENER 7.5V 0.05 0.5W (F1)
IC702	9322 140 00668	IC SM AN7323S (MATJ)	Q5001	9940 000 00915	XISTR NPN 2SC1623	ZD213	9965 000 26930	CHIP ZENER 5.6V 0.05 0.5W (E2)
IC703	4822 209 32919	HEF4952BT	Q5002	9940 000 00921	XISTR PNP 2SA812 HFE:200-400	ZD214	9965 000 26930	CHIP ZENER 5.6V 0.05 0.5W (E2)
IC704	4822 209 32919	HEF4952BT	Q501	9940 000 00915	XISTR NPN 2SC1623	ZD215	9965 000 26930	CHIP ZENER 5.6V 0.05 0.5W (E2)
IC705	9940 000 01587	IC 16P HEF4094BT	Q502	9940 000 00915	XISTR NPN 2SC1623	ZD216	9965 000 26930	CHIP ZENER 5.6V 0.05 0.5W (E2)
IC801	9940 000 05214	IC 28P V5888S	Q503	4822 130 41651	2SC2001L	ZD217	9965 000 26930	CHIP ZENER 5.6V 0.05 0.5W (E2)
IC804	9940 000 00855	IC 8PIN BA6287FE2	Q701	9940 000 00864	FET J111TO92 40V 20MA	ZD218	9965 000 26930	CHIP ZENER 5.6V 0.05 0.5W (E2)
IC805	9940 000 00855	IC 8PIN BA6287FE2	Q702	9940 000 00921	XISTR PNP 2SA812 HFE:200-400	ZD219	9965 000 26930	CHIP ZENER 5.6V 0.05 0.5W (E2)
JK201	9965 000 17363	RCA JACK 1P W/GND P	Q703	9940 000 00921	XISTR PNP 2SA812 HFE:200-400	ZD301	9965 000 26930	CHIP ZENER 5.6V 0.05 0.5W (E2)
JK202	9965 000 23599	RCA+DIN JK 1RCA+4P DIN YEL	Q704	9940 000 00915	XISTR NPN 2SC1623	ZD302	9965 000 26930	CHIP ZENER 5.6V 0.05 0.5W (E2)
JK203	9940 000 00857	RCA JACK 3P R-B-G	Q705	4822 130 41198	2SC945P	ZD320	9940 000 05264	CHIP ZENER 3.0V 5% 0.5W
JK301	9940 000 00859	RCA JACK 4P W-W/R-R AUDIO IN	Q706	9940 000 00915	XISTR NPN 2SC1623	ZD404	9965 000 26930	CHIP ZENER 5.6V 0.05 0.5W (E2)
JK401	9940 000 00861	RCA+DIN JACK 1RCA+8P DIN BLK	Q707	9940 000 00915	XISTR NPN 2SC1623	ZD405	9965 000 26930	CHIP ZENER 5.6V 0.05 0.5W (E2)
JK501	9940 000 00862	SPK JACK 4P RED-WHT-BLK-BLK	Q708	9940 000 00915	XISTR NPN 2SC1623	ZD406	9965 000 26931	CHIP ZENER 7.5V 0.05 0.5W (F1)
L5105	9940 000 05331	TOROID COIL 10UH I=5A 300R 4P	Q709	9940 000 00915	XISTR NPN 2SC1623	ZD501	9965 000 26930	CHIP ZENER 5.6V 0.05 0.5W (E2)
L5201	9940 000 05332	IND. 10UH/10A 20%	Q710	9965 000 26939	XISTR PNP 2SA952PPM	ZD701	9965 000 38424	CHIP ZENER 7.79V-8.61V 0.5W
L5202	9940 000 05332	IND. 10UH/10A 20%	Q711	9940 000 00915	XISTR NPN 2SC1623	ZD703	9965 000 38425	CHIP ZENER 9.1V 5% 0.5W
L5203	9940 000 05332	IND. 10UH/10A 20%	Q713	9940 000 00915	XISTR NPN 2SC1623	ZD801	9965 000 38425	CHIP ZENER 9.1V 5% 0.5W
L5204	9940 000 05332	IND. 10UH/10A 20%	Q714	9940 000 00915	XISTR NPN 2SC1623	ZD802	9940 000 05334	ZENER ZMM5242B 500MW 12V 5%
L5301	9940 000 05332	IND. 10UH/10A 20%	Q716	9965 000 26939	XISTR PNP 2SA952PPM			
L5302	9940 000 05332	IND. 10UH/10A 20%	Q717	9940 000 00915	XISTR NPN 2SC1623			
L5303	9940 000 05332	IND. 10UH/10A 20%	Q718	4822 130 41651	2SC2001L			

Note: Only these parts mentioned in the list are normal service parts.

TUNER BOARD

TABLE OF CONTENTS

Tuner Adjustment Table 7-1
Circuit Diagram 7-2
PCB Layout 7-3

Remark: The module is not intend to be repaired on component level. Circuit Diagrams and Printed Board drawings are published for orientation only. The whole Tuner Board Ass'y can be orderd with 12nc: 9940 000 05366 for /37/55/98.

7-1

TUNER ADJUSTMENT TABLE

Waverange	Input frequency	Input	Tuned to	Adjust	Output	Scope/Voltmeter
VARICAP ALIGNMENT						
FM 87.5 - 108MHz (50kHz grid)			108MHz	check		7.5V ±1V
			87.5MHz	check		1.4V ±0.2V
MW 531-1602kHz (9kHz grid) 530-1700kHz (10kHz grid) (98/ 55/ 51)			1602KHz	check		7.2V ±1V
			531KHz	T005		1.1V ±0.2V
			1700KHz	check		7.2V ±1V
			531KHz	T005		1.1V ±0.2V
FM - RF						
FM	108MHz	mod=1kHz △f=±22.5kHz	106MHz	VC001	MAX	MAX
	87.5MHz		90.1MHz	L001		
AM IF						
AM	450kHz Connect pin 6 of IC001 (AM Osc.) with short wire to ground (pin 4)	△f = ±15kHz V_{RF} = 3mV	IC001 24 100nF R220	T001 T002	MAX	max. f_o symmetric
AM AFC **MW**		△V=mV		T003		
AM RF 3)						
MW	1404kHz		1404kHz	VC001	MAX	max. f_o symmetric
	612kHz		612kHz	T006		
	1000kHz		1000kHz	VC001		
	600kHz		600kHz	T006		

Use Service Testprogram. By selecting the TUNER TEST test frequencies will be stored as preset frequencies automatically.

1) If sensitivity of frequency counter is too low adjust to max. channel separation (input signal: stereo left 90% + 9%, adjust output on right channel to minimum)

2) RC network serves for damping the IF-filter while adjusting the other one.

3) For AM RF adjustments the original frame antenna has to be used!

7-2

CIRCUIT DIAGRAM : TUNER BOARD

ANT001	A1	C009	B1	C015	A2	C023	C2	C031	B2	C038	E1	C047	B1	D002	A1	IF003	C2	R002	B1	R015	B1	R023	D1	R030	E1	T003	D1	VD003	A1
C002	A1	C01	D2	C016	B2	C024	C2	C032	D1	C039	E2	C048	B1	D003	E1	L02	A1	R004	B1	R016	D2	R024	B1	R031	E2	T005	A2	VD004	B2
C004	E2	C010	B2	C019	B1	C025	C2	C033	D1	C040	D2	C050	B1	D004	C2	L001	B1	R005	B1	R017	C2	R025	C2	R032	D2	T006	A1	VR001	B1
C005	B1	C011	A2	C02	D2	C026	B2	C034	C2	C041	D1	C052	C2	D005	A2	Q001	D2	R006	B1	R018	D2	R026	C2	R033	B1	VC001	B1	XL1	D2
C006	B1	C012	B2	C020	D1	C029	C2	C035	B1	C042	D1	CN001	E2	IC001	C1	Q002	E1	R007	C1	R019	D2	R027	D1	R034	E1	VC002	A2		
C007	B1	C013	B2	C021	C2	C03	B1	C036	E2	C043	D1	CN002	A1	IF001	D1	Q003	B1	R010	A2	R020	E2	R028	E1	T001	C1	VD001	B1		
C008	B1	C014	B2	C022	C2	C030	D2	C037	C2	C044	D2	D001	A1	IF002	C1	R001	B1	R011	B2	R021	E2	R029	E1	T002	D1	VD002	B1		

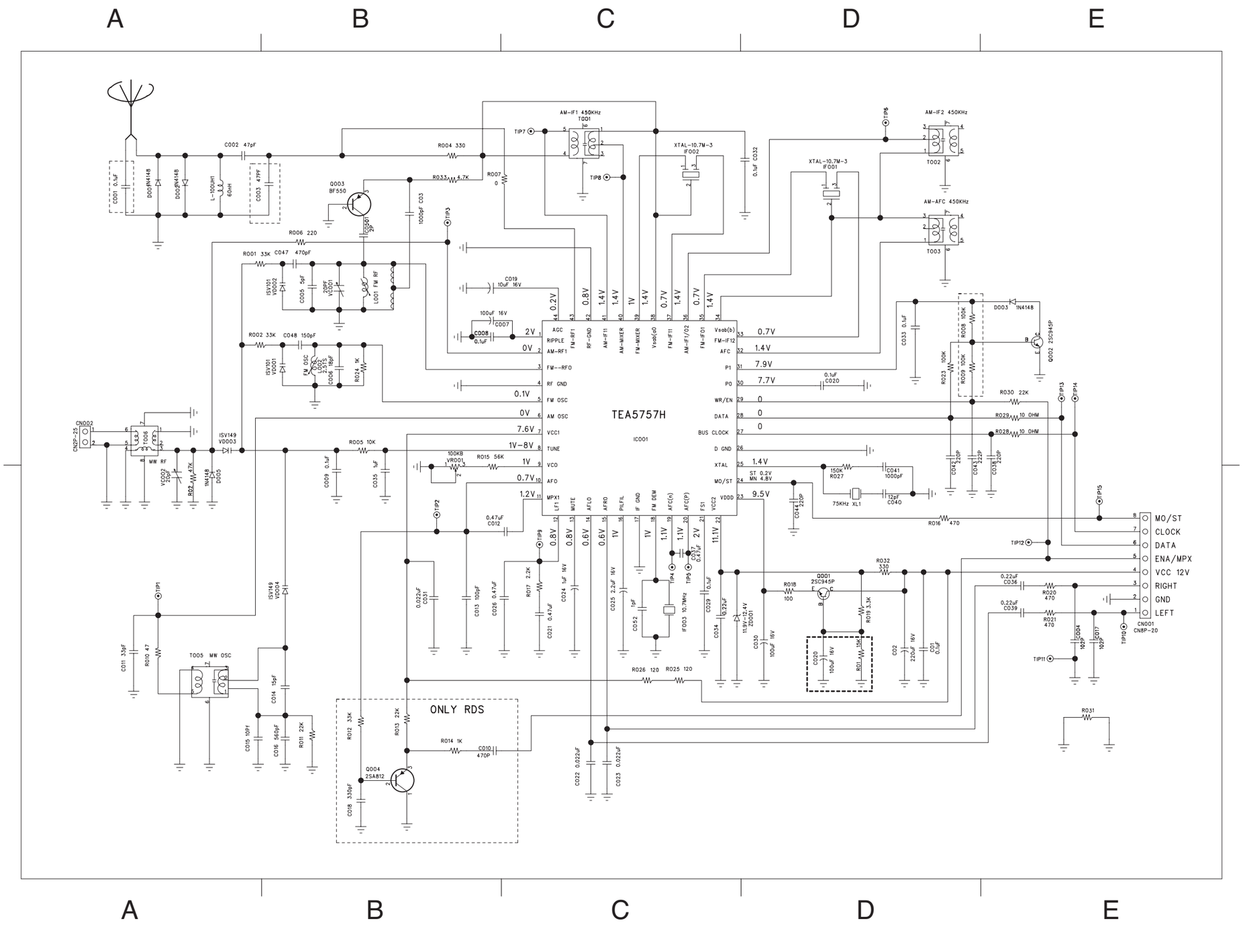

7-3

PCB LAYOUT - TUNER BOARD (TOP VIEW)

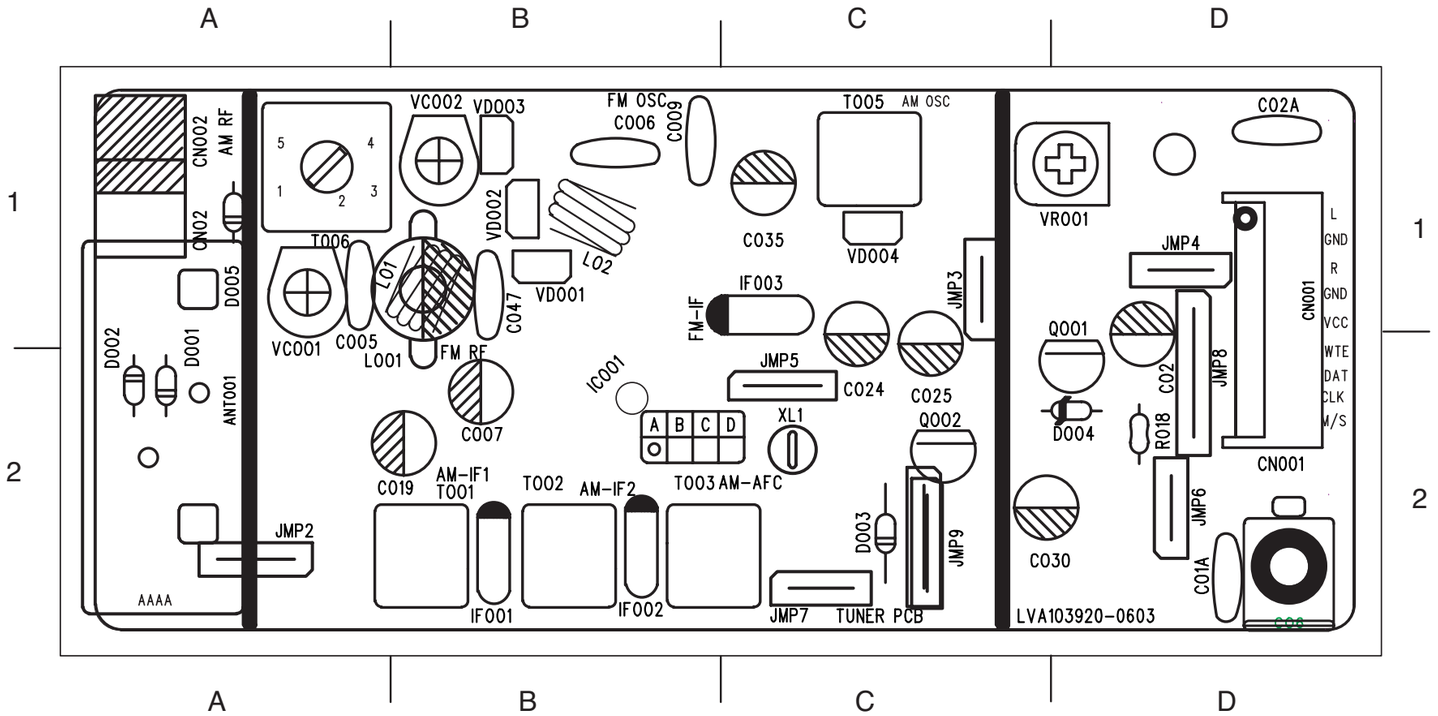

ANT001	A2	JMP4	D1
C02	D1	JMP5	C2
C005	A1	JMP6	D2
C006	B1	JMP7	C2
C007	B2	JMP8	D2
C009	B1	JMP9	C2
C01	D2	L001	B1
C019	B2	L02	B1
C024	C2	Q001	D2
C025	C2	Q002	C2
C030	D2	R018	D2
C035	C1	T001	B2
C047	B1	T002	B2
CN001	D1	T003	B2
CN002	A1	T005	C1
D001	A2	T006	A1
D002	A2	VC001	A1
D003	C2	VC002	B1
D004	D2	VD001	B1
D005	A1	VD002	B1
IF001	B2	VD003	B1
IF002	B2	VD004	C1
IF003	C1	VR001	D1
JMP2	A2	XL1	C2
JMP3	C1		

PCB LAYOUT - TUNER BOARD (BOTTOM VIEW)

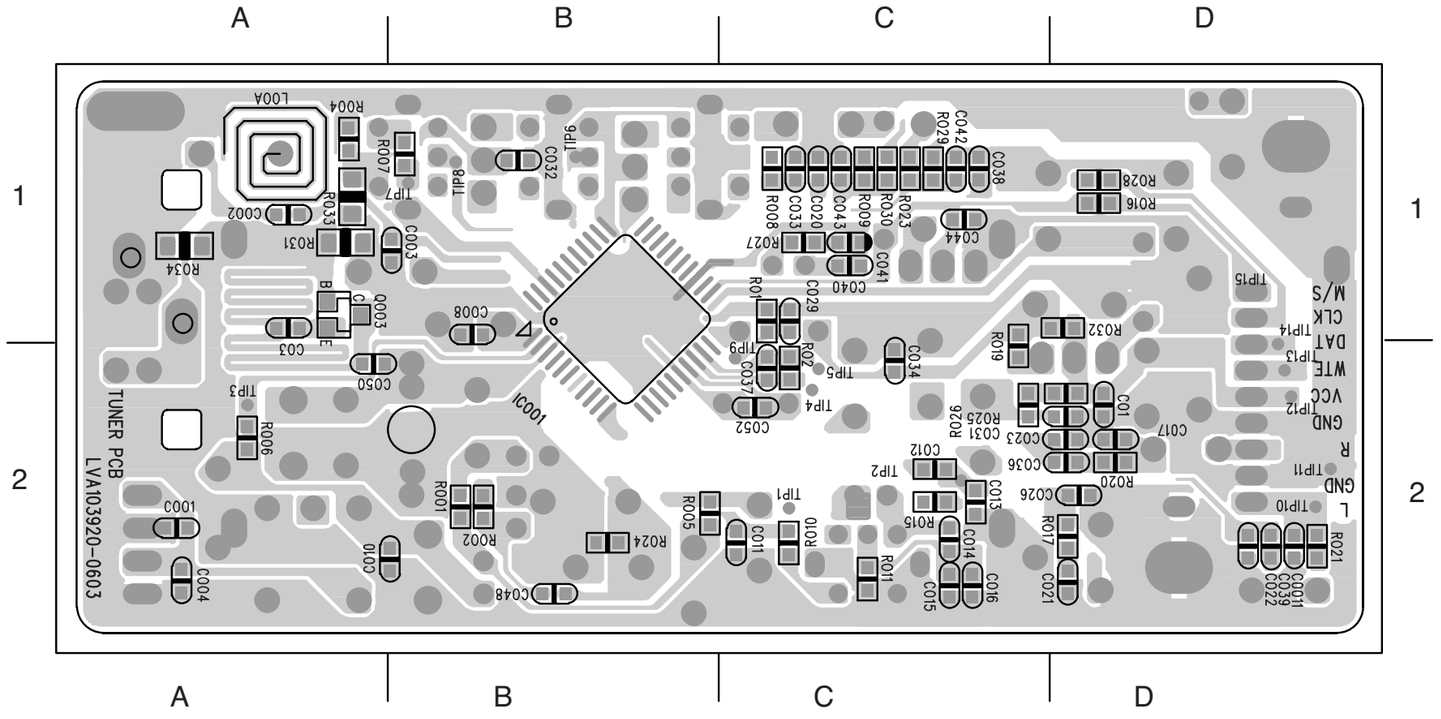

C002	A1	C050	A2
C004	A2	C052	C2
C008	B1	IC001	B1
C010	A2	Q003	A1
C011	D2	R001	B2
C012	C2	R002	B2
C013	C2	R004	A1
C014	C2	R005	B2
C015	C2	R006	A2
C016	C2	R007	B1
C020	C1	R010	C2
C021	D2	R011	C2
C022	D2	R015	C2
C023	D2	R016	D1
C026	D2	R017	D2
C029	C1	R019	C2
C03	A1	R020	D2
C031	C2	R021	D2
C032	B1	R023	C1
C033	C1	R024	B2
C034	C2	R025	C2
C036	D2	R026	C2
C037	C2	R027	C1
C038	C1	R028	D1
C039	D2	R029	C1
C040	C1	R030	C1
C041	C1	R031	A1
C042	C1	R032	D1
C043	C1	R033	A1
C044	C1	R034	A1
C048	B2		

POWER BOARD

TABLE OF CONTENTS

Voltage 8-1
Circuit Diagram 8-2
PCB Layout (/98 ver & /55 ver) 8-3
Electrical Parts List 8-4

8-1

VOLTAGE

IC901																
Pin NO	1	2	3	4	5	6	7	8								
Voltage	3.66	0.01	0.40	1.90	0.00	2.66	15.87	5.00								

IC902																
Pin NO	1	2	3	4												
Voltage	5.00	-3	2.70	3.96												

IC903																
Pin NO	1	2	3													
Voltage	3.90	0.00	2.40													

IC904																
Pin NO	1	2	3	4	5	6	7	8	9	10	11	12	13	14	15	16
Voltage	4.90	4.90	0.00	0.40	1.30	3.20	0.00	1.20	1.20	13.30	13.30	4.90	4.90	4.90	0.00	13.40

IC905																
Pin NO	1	2	3	4	5	6	7	8								
Voltage	0.00	4.90	0.70	0.00	1.20	4.90	12.00	13.30								

IC906																
Pin NO	1	2	3	4												
Voltage	1.10	-3.38	-3	0.04												

Q901			
Pin NO	1	2	3
Voltage	0	278	0

Q902			
Pin NO	1	2	3
Voltage	248	296	243

Q903			
Pin NO	1	2	3
Voltage	0.8	0	0.8

Q904			
Pin NO	1	2	3
Voltage	0.8	0	0.7

Q905			
Pin NO	1	2	3
Voltage	0	5.1	0

Q906			
Pin NO	1	2	3
Voltage	-11.9	-24.8	-12.4

Q908			
Pin NO	1	2	3
Voltage	-27.6	-28.3	-28.3

Q909			
Pin NO	1	2	3
Voltage	5	5.18	11.94

Q910			
Pin NO	1	2	3
Voltage	0	-27.5	0.5

Q911			
Pin NO	1	2	3
Voltage	13.02	0.65	13.03

Q912			
Pin NO	1	2	3
Voltage	0.6	0	0

Q913			
Pin NO	1	2	3
Voltage	0	0.02	0.65

Q914			
Pin NO	1	2	3
Voltage	1	0.9	0.8

Q915			
Pin NO	1	2	3
Voltage	0.13	2.2	0

Q916			
Pin NO	1	2	3
Voltage	0	0	0.6

Q917			
Pin NO	1	2	3
Voltage	0	251	0

Q918			
Pin NO	1	2	3
Voltage	0	0	0.6

Q919			
Pin NO	1	2	3
Voltage	3.6	0	5

Q920			
Pin NO	1	2	3
Voltage	0.68	0	0

8-2

CIRCUIT DIAGRAM-POWER BOARD

BD901	D1	C916	B1	C931	B2	C946	B3	C961	B4	D902	C4	D919	B2	L905	D3	Q913	A4	R911	C2	R928	C2	R943	C3	R958	C4	R973	A2	R988	A2
C902	C1	C917	A1	C932	A3	C947	D3	C962	A3	D903	B2	D920	B2	L906	B3	Q914	B4	R912	D2	R929	A3	R944	D3	R959	B4	R974	B4	R989	A2
C903	C1	C918	A1	C933	C2	C948	A1	C963	D4	D904	C2	F901	B1	L907	D3	Q915	A1	R913	B2	R930	A3	R945	B3	R960	D4	R975	B4	T901	D2
C904	B1	C919	D2	C934	D2	C949	D3	C964	B4	D905	D2	IC901	B1	NTC901	B1	Q916	B3	R914	C2	R931	C3	R946	B1	R961	D4	R976	B4	T902	C2
C905	C1	C920	B2	C935	D2	C950	C3	C965	B4	D906	B2	IC902	A2	Q901	C2	Q917	B2	R915	D2	R932	C3	R947	B3	R962	C4	R977	B3	T903	B2
C906	B1	C921	B1	C936	B2	C951	C3	C966	A1	D909	B2	IC903	A2	Q902	D2	Q918	A2	R916	D2	R933	B3	R948	B3	R963	D4	R978	A1	TVR901	B1
C907	B2	C922	C2	C937	B2	C952	D3	C968	A1	D910	B2	IC904	C4	Q903	C3	Q919	B3	R917	C2	R934	C3	R949	D3	R964	B4	R979	B3	TVR902	D1
C908	D1	C923	D2	C938	B2	C953	D3	C970	B2	D911	B2	IC905A	C4	Q904	C3	R902	B1	R918	A2	R935	C3	R950	C3	R965	B4	R980	B4	TVR903	D1
C909	D1	C924	D2	C939	B2	C954	B2	C971	A3	D912	C3	IC905B	C4	Q905	B3	R903	B1	R919	D2	R936	B3	R951	B3	R966	C4	R981	B3	ZD902	C4
C910	D1	C925	B2	C940	D2	C955	C3	CN901	A1	D913	D3	IC906	A2	Q906	C3	R905	C1	R920	A2	R937	B2	R952	B3	R967	C4	R982	B3	ZD903	C2
C911	D1	C926	B2	C941	B2	C956	D3	CN903	D1	D914	C3	J901	D1	Q908	B3	R906	B2	R921	B2	R938	B3	R953	B3	R968	B4	R983	B3	ZD904	D2
C912	B1	C927	A2	C942	B2	C957	B2	CN904	D4	D915	C3	L901	C1	Q909	B3	R907	C1	R924	A2	R939	B3	R954	D4	R969	B4	R984	B3	ZD905	B3
C913	B1	C928	B2	C943	B3	C958	B3	CN905	A4	D916	D3	L902	C1	Q910	B3	R908	D1	R925	B2	R940	B3	R955	B4	R970	A2	R985	A2	ZD906	D4
C914	A1	C929	C2	C944	B3	C959	C3	CN906	B4	D917	D4	L903	C2	Q911	B3	R909	D1	R926	B2	R941	A3	R956	B4	R971	B1	R986	A4	ZD907	C4
C915	A1	C930	B2	C945	D3	C960	A3	D901	B1	D918	C4	L904	B3	Q912	B3	R910	B1	R927	D3	R942	C3	R957	D4	R972	A2	R987	A2		

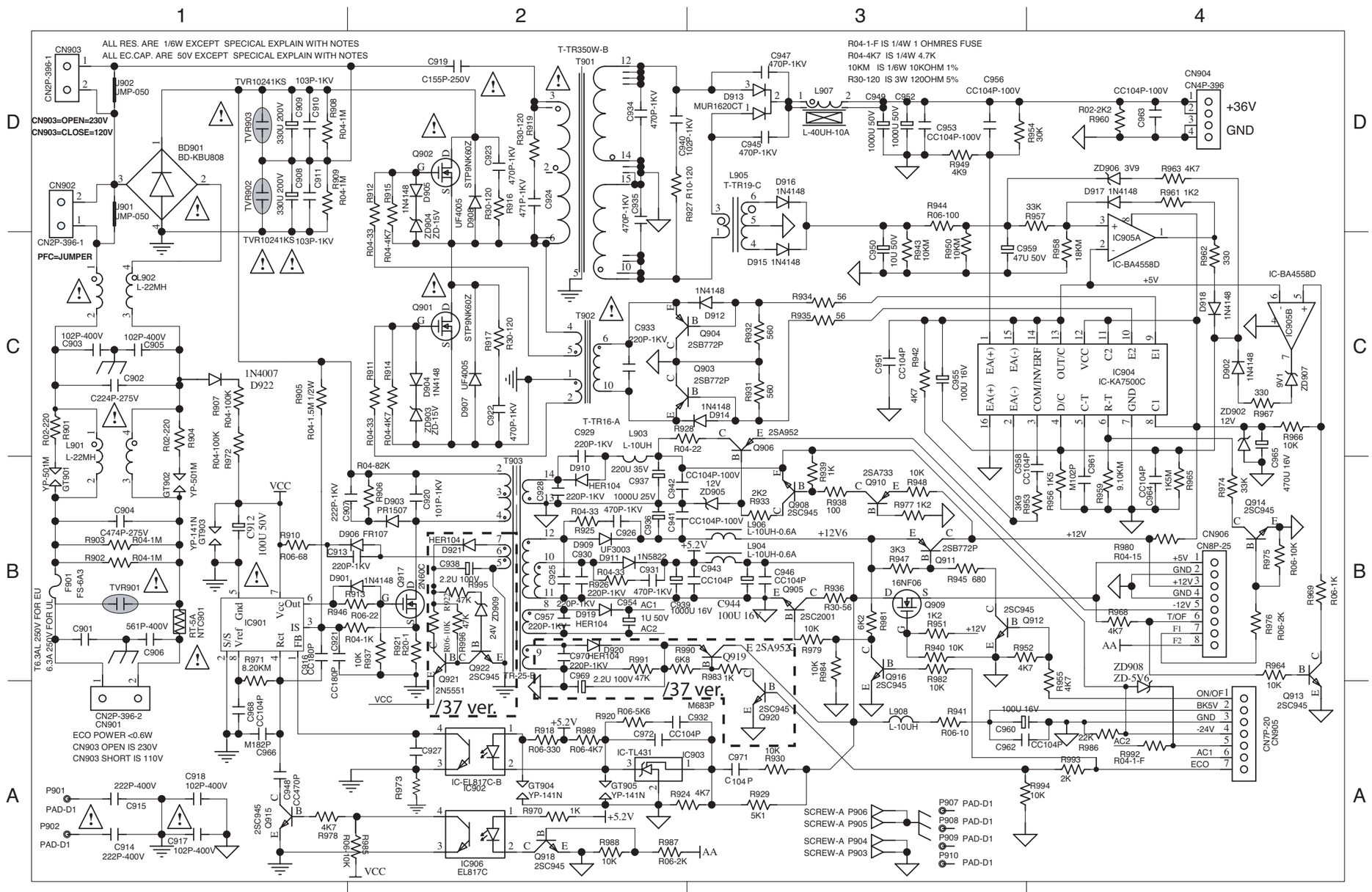

8-3

PCB LAYOUT-POWER BOARD (/98 ver. & /55 ver.)

BD901	A1	C914	B1	C928	B2	C942	B3	C956	A3	C971	B3	D908	B2	GT902	B1	J905	B1	J920	B3	L907	A3	Q912	B3	R906	B2	R920	B3	R935	A2	R949	A3	R963	A3	R977	B3	T901	A2
C901	B1	C915	A2	C929	B2	C943	B3	C957	B3	CN901	B1	D909	B2	GT903	B2	J906	B1	J921	B3	NTC901	B1	Q913	B3	R907	B1	R921	B2	R936	B3	R950	A3	R964	B3	R978	B2	T902	A2
C902	A1	C916	B2	C930	B2	C944	B3	C958	A3	CN902	A1	D910	B2	GT904	B2	J907	B1	J922	B3	P901	A1	Q914	B3	R908	A1	R923	B3	R937	B1	R951	B3	R965	A2	R979	B3	T903	B2
C903	A1	C917	B2	C931	B2	C945	A3	C959	A3	CN903	A1	D911	B2	GT905	B2	J908	B2	J923	B2	P902	B1	Q915	B2	R909	A1	R924	B2	R938	B3	R952	B3	R966	B3	R980	B3	TVR901	B1
C904	B1	C918	A2	C932	B3	C946	B3	C960	B3	CN904	B3	D912	B2	IC901	B2	J909	B2	J924	B2	Q901	A2	Q916	B3	R910	B2	R925	B2	R939	B3	R953	A3	R967	A3	R981	B3	TVR902	A1
C905	B1	C919	A1	C933	B2	C947	A3	C961	A2	CN905	B3	D913	A3	IC902	B2	J910	B2	J925	B2	Q902	B2	Q917	B2	R911	A2	R926	B2	R940	B3	R954	A3	R968	B3	R982	B3	TVR903	A1
C906	B1	C920	B2	C934	A2	C948	B2	C962	B3	CN906	B3	D914	A2	IC903	B2	J911	B2	J926	B2	Q903	A2	Q918	B2	R912	B2	R927	A2	R941	B3	R955	B3	R969	B3	R983	B2	ZD902	B3
C907	B2	C921	B2	C935	A2	C949	A3	C963	A3	D901	B2	D915	A3	IC904	B2	J912	B3	J930	B2	Q904	B2	Q919	B2	R913	B2	R928	B3	R942	A3	R956	A3	R970	B2	R984	B3	ZD903	A2
C908	A1	C922	A2	C936	B3	C950	A3	C964	A3	D902	A3	D916	A3	IC905	B3	J913	B3	L901	B1	Q905	B3	Q920	B2	R914	A2	R929	B3	R943	A3	R957	A3	R971	B2	R985	B1	ZD904	B2
C909	B1	C923	A2	C937	B3	C951	A3	C965	B3	D903	B2	D917	B3	IC906	B2	J915	B3	L902	A1	Q906	B3	R901	B1	R915	B2	R930	B3	R944	A3	R958	A3	R972	B1	R986	B3	ZD905	B3
C910	A1	C924	A2	C938	B3	C952	A3	C966	B2	D904	A2	D918	B3	J901	A1	J916	B3	L903	B3	Q908	B3	R902	B1	R916	A2	R931	A2	R945	B3	R959	A2	R973	B2	R987	B3	ZD906	A3
C911	A1	C925	B2	C939	B3	C953	A3	C967	B2	D905	B2	D919	B2	J902	A1	J917	B3	L904	B3	Q909	B3	R903	B1	R917	A2	R932	B2	R946	B2	R960	A3	R974	B3	R988	B3	ZD907	A3
C912	B2	C926	B2	C940	A2	C954	B3	C968	B2	D906	B2	D920	B2	J903	A1	J918	B3	L905	A3	Q910	B3	R904	B1	R918	B2	R933	B3	R947	B3	R961	B3	R975	B3	R989	B2		
C913	B2	C927	B3	C941	B2	C955	A3	C970	B2	D907	A2	F901	B1	J904	A1	J919	B2	L906	B3	Q911	B3	R905	B2	R919	A2	R934	B2	R948	B3	R962	B3	R976	B3	R990	B2		

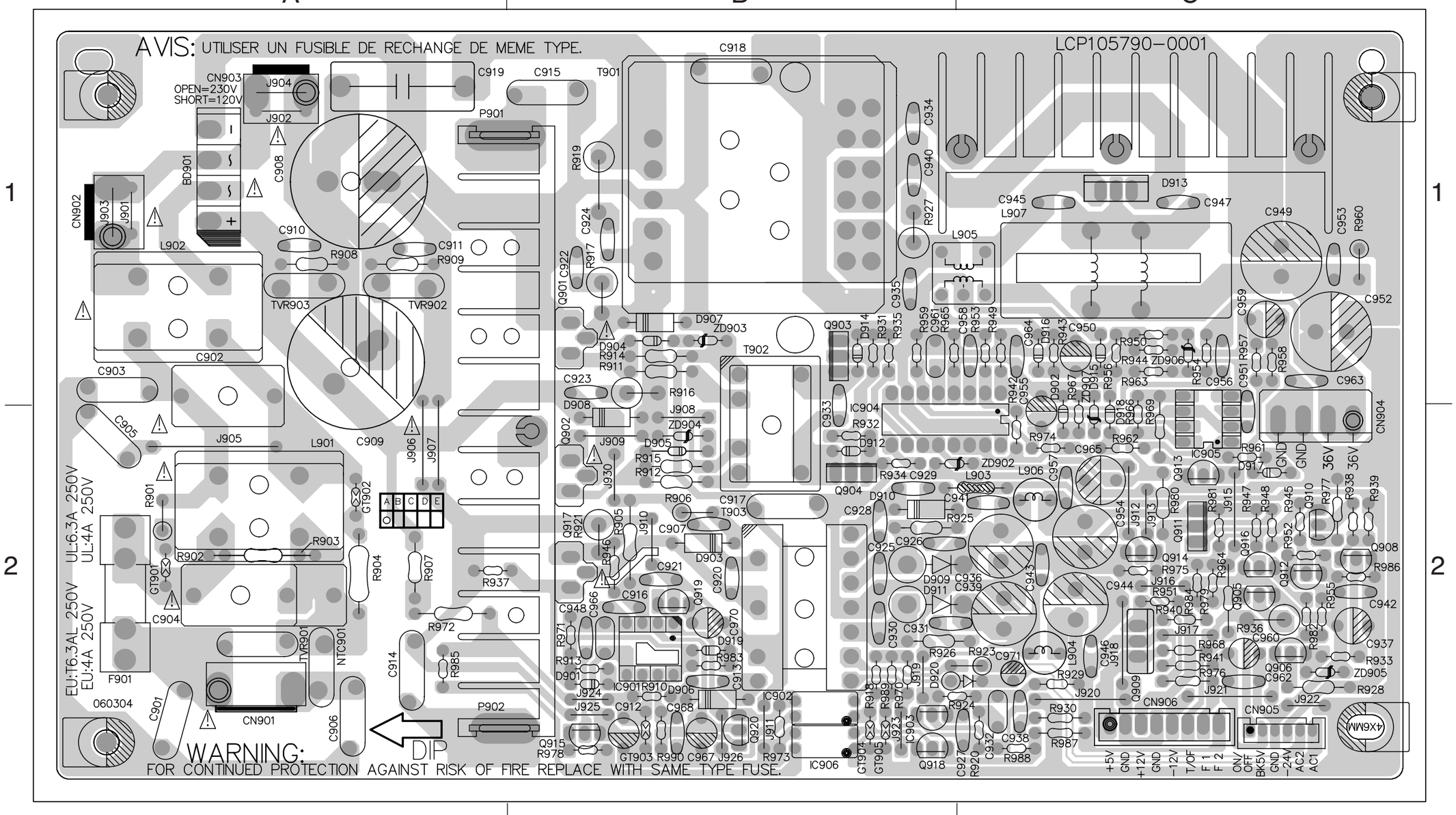

8-4

ELECTRICAL PARTS LIST - POWER BOARD

BD901	9965 000 28768	BRIDGE KBU8B 8A 100V UL	
C902	⚠ 9940 000 05343	COND SAF. 0.22UF 275V 20%	
C903	⚠ 9965 000 27115	CAP. SAFTY Y1 102PF 250V 20%	
C904	⚠ 9940 000 00932	COND SAFTY 0.47UF 275V 10%	
C905	⚠ 9965 000 27115	CAP.SAFTY Y1 102PF 250V 20%	
C906	⚠ 9940 000 05344	CAP. SAFET. 560PF 400V 10%	
C907	9965 000 18042	COND DISC 0.01UF 1KV 20%	
C910	9965 000 18042	COND DISC 0.01UF 1KV 20%	
C911	9965 000 18042	COND DISC 0.01UF 1KV 20%	
C913	9940 000 05236	COND DISC 220PF 1KV 10%	
C917	⚠ 9965 000 27115	CAP.SAFTY Y1 102PF 250V 20%	
C918	⚠ 9965 000 27115	CAP.SAFTY Y1 102PF 250V 20%	
C920	9940 000 05235	COND DISC 100PF 1KV 10%	
C922	9965 000 20264	COND DISC 470PF 1KV 10%	
C923	9965 000 20264	COND DISC 470PF 1KV 10%	
C924	9965 000 20261	COND DISC 0.001UF 1KV 20%	
C925	9940 000 05236	COND DISC 220PF 1KV 10%	
C926	9965 000 20264	COND DISC 470PF 1KV 10%	
C928	9940 000 05236	COND DISC 220PF 1KV 10%	
C929	9940 000 05236	COND DISC 220PF 1KV 10%	
C930	9940 000 05236	COND DISC 220PF 1KV 10%	
C931	9965 000 20264	COND DISC 470PF 1KV 10%	
C933	9940 000 05236	COND DISC 220PF 1KV 10%	
C934	9965 000 20264	COND DISC 470PF 1KV 10%	
C935	9965 000 20264	COND DISC 470PF 1KV 10%	
C940	9965 000 20261	COND DISC 0.001UF 1KV 20%	
C945	9965 000 20264	COND DISC 470PF 1KV 10%	
C947	9965 000 20264	COND DISC 470PF 1KV 10%	
D903	9940 000 00938	DIODE PR1507 1.5A 1000V	
D906	9965 000 09537	DIODE FR107 1A/1000V	
D909	9940 000 00943	DIODE UF3003 3A 200V	
D910	9940 000 00941	DIODE HER104 1A 300V 50NS	
D911	9940 000 05249	DIODE SB360 3A 60V	
D913	9940 000 05346	RECTIFIER UF1602CT	
F901	⚠ 9965 000 28769	FUSE 6.3A 250V SLOW 5X20MM	
GT901	9965 000 29309	ABSORBER 500V 500A	
GT903	9965 000 29310	ABSORBER 500V 500A	
GT904	9965 000 29310	ABSORBER 500V 500A	
GT905	9965 000 29310	ABSORBER 500V 500A	
IC901	9940 000 05255	IC 8P UC3843AL	
IC902	9940 000 00946	OPTICAL SENSOR 4P	
IC903	9940 000 00952	IC 3PIN TL431	
IC904	9940 000 00951	IC 16PIN KA7500C	
IC905	9940 000 00949	IC 8PIN JRC4558D	
IC906	9940 000 00946	OPTICAL SENSOR 4P	
L902	9940 000 05233	COMMON COIL 22MH	
L904	9965 000 16694	6UH 13.5TS 2UEW	
L905	9965 000 27102	TOROID COIL S1=1TS	
L906	9965 000 16694	6UH 13.5TS 2UEW	
L907	9940 000 05341	COMMON COIL 65UH +/-10%	
NTC901	9940 000 00957	NTC 5R 5A	
Q901	9940 000 05349	MOSFET FQP12N60C N-CH	
Q902	9940 000 05349	MOSFET FQP12N60C N-CH	
Q903	9965 000 26946	XISTR PNP 2SB772P/Q	
Q904	9965 000 26946	XISTR PNP 2SB772P/Q	
Q905	4822 130 41651	2SC2001L	
Q906	9940 000 05347	XISTR PNP 2SA952-K	
Q908	4822 130 41198	2SC945P	
Q909	4822 130 11336	STP16NF06FP	
Q910	9965 000 28743	XISTR PNP 2SA733Q,P NEC	
Q911	9965 000 26946	XISTR PNP 2SB772P/Q	
Q912	4822 130 41198	2SC945P	
Q913	4822 130 41198	2SC945P	
Q914	4822 130 41198	2SC945P	
Q915	4822 130 41198	2SC945P	
Q916	4822 130 41198	2SC945P	
Q917	9940 000 05348	MOSFET STF3NK80Z N-CH 2.5A	
Q918	4822 130 41198	2SC945P	
Q919	9965 000 28743	XISTR PNP 2SA733Q,P NEC	
Q920	4822 130 41198	2SC945P	
R922	⚠ 9940 000 05246	FUSE. RES 2.7R 1/4W 5%	
R923	⚠ 9940 000 05246	FUSE. RES 2.7R 1/4W 5%	
T901	⚠ 9965 000 38408	TRANS. EC-3942 8 8PIN	
T902	⚠ 9940 000 01057	SW. MODEL TRANSFORMER	
T903	9940 000 05342	TRANS FERRITE CORE ER-25	
TVR901	9965 000 32754	THERMIST 50A 561V	
TVR902	9965 000 27114	VARI FOR SURGE VOLT. TVR10	
TVR903	9965 000 27114	VARI FOR SURGE VOLT. TVR10	
ZD902	9965 000 26940	DIODE ZENR 11.9-12.4V 0.5W	
ZD903	9940 000 02067	DIODE ZENR 14.5-15.1V 0.5W	
ZD904	9940 000 02067	DIODE ZENR 14.5-15.1V 0.5W	
ZD905	9965 000 26940	DIODE ZENR 11.9-12.4V 0.5W	
ZD906	9965 000 27138	DIODE ZENR 3.8-4.0V 0.5W	
ZD907	9965 000 28741	DIODE ZENR 9.1-9.5V 0.5W	

Note: Only these parts mentioned in the list are normal service parts.

9-1

SET MECHANICAL EXPLODED VIEW

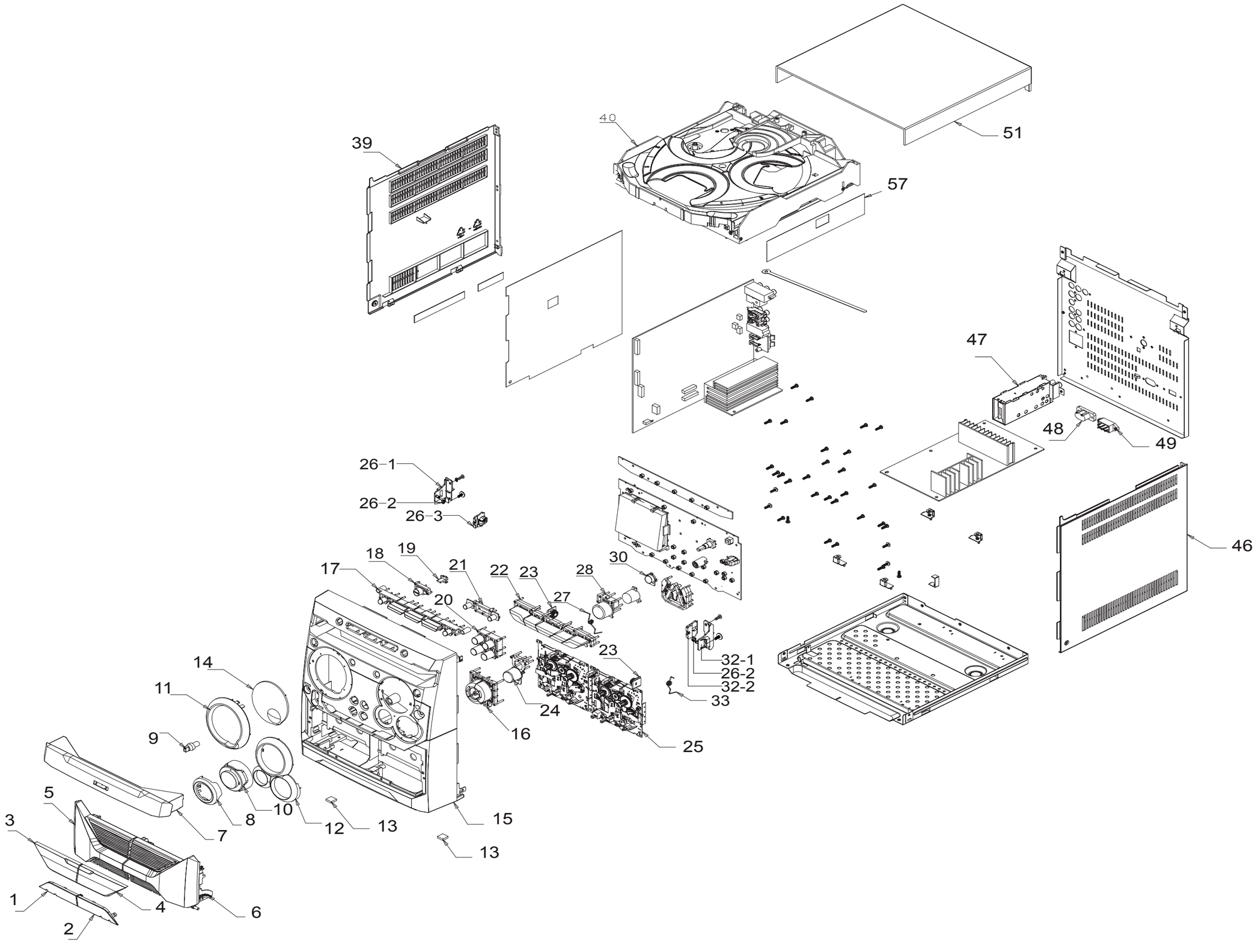

9-2

MECHANICAL & ACCESSORIES PARTS LIST

01	9940 000 01531	CASS LENS BOTTOM RIGHT
02	9940 000 01537	CASS LENS BOTTOM LEFT
03	9940 000 01529	CASS LENS TOP RIGHT
04	9940 000 01536	CASS LENS TOP LEFT
05	9965 000 38415	CASS BOX RIGHT
06	9965 000 38414	CASS BOX LEFT
07	9965 000 38413	CDC TRAY DOOR
08	9940 000 01522	VOL KNOB GRIP
09	9965 000 38420	KNOB-MIC-VOLUME
10	9940 000 01543	VOL KNOB RING
11	9940 000 01545	DISPLAY RING
12	9940 000 01544	COMESTIC RING
14	9940 000 01533	DISPLAY LENS
15	9965 000 38416	FRONT CABINET
16	9940 000 01518	CD CONTROL KEY
17	9940 000 01521	CD DISC KEY
18	9965 000 38419	STANDBY KEY
19	9940 000 01532	STANDBY LENS
20	9965 000 38421	SOURCE KEY
21	9940 000 01523	AUTO KEYS
22	9940 000 01524	MODE KEY
23	9965 000 22120	DAMPER-ASSY-MODULE-0.8
24	9965 000 38418	CD PLAY KEY
25	9940 000 01552	TAPE DECK VALLEYWOOD
26-1	9940 000 01516	BRACKET LEFT
26-2	9940 000 01268	SPRING COMPRESSION
26-3	9940 000 01538	PUSH-CATCH RIGHT
27	9940 000 01267	SPRING RIGHT
28	9940 000 01525	DBB KEY
30	9940 000 01534	IR LENS
32-1	9940 000 01515	BRACKET RIGHT
32-2	9940 000 01539	PUSH CATCH-LEFT
33	9940 000 01266	SPRING LEFT
39	9940 000 01541	PANEL RIGHT
40	9940 000 05355	3DVD CHANGER MECH & PCB
46	9940 000 01542	PANEL LEFT
47	9940 000 05366	RADIO PCB ASS'Y
51	9940 000 01509	COVER TOP
	9940 000 00924	RCA CABLE 1500MM
	9940 000 00929	PICK UP ASS'Y HITACHI
	9940 000 01553	REMOTE CONTROL 45 KEY
	9940 000 02731	FM ANTENNA 1500MM
	9965 000 23267	RCA CABLE 1200MM OD2.6X5.2
	9965 000 23580	RCA CABLE 1500MM OD2.6MM
	9965 000 38411	FFC CABLE 24P 380MM
⚠	9965 000 38422	LINE CORD 2P 1800MM
	9965 000 38633	LEFT MAIN SPK BOX
	9965 000 38634	RIGHT MAIN SPK BOX

Note: Only these parts mentioned in the list are normal service parts.