Pioneer

Operating Instructions

SC-99
SC-97

ELITE

AV Receiver

IMPORTANT

The lightning flash with arrowhead symbol, within an equilateral triangle, is intended to alert the user to the presence of uninsulated "dangerous voltage" within the product's enclosure that may be of sufficient magnitude to constitute a risk of electric shock to persons.

CAUTION
RISK OF ELECTRIC SHOCK DO NOT OPEN

CAUTION:
TO PREVENT THE RISK OF ELECTRIC SHOCK, DO NOT REMOVE COVER (OR BACK). NO USER-SERVICEABLE PARTS INSIDE. REFER SERVICING TO QUALIFIED SERVICE PERSONNEL.

The exclamation point within an equilateral triangle is intended to alert the user to the presence of important operating and maintenance (servicing) instructions in the literature accompanying the appliance.

D3 4 2 1 1b_A1_En

WARNING

This equipment is not waterproof. To prevent a fire or shock hazard, do not place any container filled with liquid near this equipment (such as a vase or flower pot) or expose it to dripping, splashing, rain or moisture.

D3 4 2 1 3_A1_En

VENTILATION CAUTION

When installing this unit, make sure to leave space around the unit for ventilation to improve heat radiation (at least 20 cm at top, 10 cm at rear, and 20 cm at each side).

WARNING

Slots and openings in the cabinet are provided for ventilation to ensure reliable operation of the product, and to protect it from overheating. To prevent fire hazard, the openings should never be blocked or covered with items (such as newspapers, table cloths, curtains) or by operating the equipment on thick carpet or a bed.

D3 4 2 1 7b*_A1_En

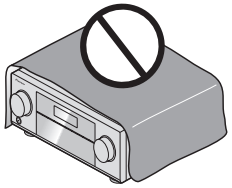

Operating Environment

Operating environment temperature and humidity: +5 °C to +35 °C (+41 °F to +95 °F); less than 85 %RH (cooling vents not blocked)
Do not install this unit in a poorly ventilated area, or in locations exposed to high humidity or direct sunlight (or strong artificial light).

D3 4 2 1 7c*_A2_En

CAUTION
The ⏻ **STANDBY/ON** switch on this unit will not completely shut off all power from the AC outlet. Since the power cord serves as the main disconnect device for the unit, you will need to unplug it from the AC outlet to shut down all power. Therefore, make sure the unit has been installed so that the power cord can be easily unplugged from the AC outlet in case of an accident. To avoid fire hazard, the power cord should also be unplugged from the AC outlet when left unused for a long period of time (for example, when on vacation).

D3 4 2 2 2a*_A1_En

WARNING

To prevent a fire hazard, do not place any naked flame sources (such as a lighted candle) on the equipment.

D3 4 2 1 7a_A1_En

IMPORTANT SAFETY INSTRUCTIONS

1) Read these instructions.
2) Keep these instructions.
3) Heed all warnings.
4) Follow all instructions.
5) Do not use this apparatus near water.
6) Clean only with dry cloth.
7) Do not block any ventilation openings. Install in accordance with the manufacturer's instructions.
8) Do not install near any heat sources such as radiators, heat registers, stoves, or other apparatus (including amplifiers) that produce heat.
9) Do not defeat the safety purpose of the polarized or grounding type plug. A polarized plug has two blades with one wider than the other. A grounding type plug has two blades and a third grounding prong. The wide blade or the third prong are provided for your safety. If the provided plug does not fit into your outlet, consult an electrician for replacement of the obsolete outlet.
10) Protect the power cord from being walked on or pinched particularly at plugs, convenience receptacles, and the point where they exit from the apparatus.
11) Only use attachments/accessories specified by the manufacturer.
12) Use only with the cart, stand, tripod, bracket, or table specified by the manufacturer, or sold with the apparatus. When a cart is used, use caution when moving the cart/apparatus combination to avoid injury from tip over.

13) Unplug this apparatus during lightning storms or when unused for long periods of time.
14) Refer all servicing to qualified service personnel. Servicing is required when the apparatus has been damaged in any way, such as power supply cord or plug is damaged, liquid has been spilled or objects have fallen into the apparatus, the apparatus has been exposed to rain or moisture, does not operate normally, or has been dropped.

D3 7 13 69_En

NOTE:
This equipment has been tested and found to comply with the limits for a Class B digital device, pursuant to Part 15 of the FCC Rules. These limits are designed to provide reasonable protection against harmful interference in a residential installation. This equipment generates, uses, and can radiate radio frequency energy and, if not installed and used in accordance with the instructions, may cause harmful interference to radio communications. However, there is no guarantee that interference will not occur in a particular installation. If this equipment does cause harmful interference to radio or television reception, which can be determined by turning the equipment off and on, the user is encouraged to try to correct the interference by one or more of the following measures:
Reorient or relocate the receiving antenna.
Increase the separation between the equipment and receiver.
Connect the equipment into an outlet on a circuit different from that to which the receiver is connected.
Consult the dealer or an experienced radio/TV technician for help.

D8 10 1 2_A1_En

Caution
To prevent fire hazard, the Class 2 Wiring Cable should be used for connection with speaker, and should be routed away from hazards to avoid damage to the insulation of the cable.

D3 7 13 67*_A1_En

WARNING: This product contains chemicals known to the State of California and other governmental entities to cause cancer and birth defects or other reproductive harm.
Wash hands after handling.

D36 P5_C1_En

Information to User
Alterations or modifications carried out without appropriate authorization may invalidate the user's right to operate the equipment.

D8 10 2_A1_En

IMPORTANT NOTICE
THE MODEL NUMBER AND SERIAL NUMBER OF THIS EQUIPMENT ARE ON THE REAR OR BOTTOM. RECORD THESE NUMBERS ON YOUR ENCLOSED WARRANTY CARD AND KEEP IN A SAFE PLACE FOR FUTURE REFERENCE.

D36 AP9 1_A1_En

CAUTION
This product satisfies FCC regulations when shielded cables and connectors are used to connect the unit to other equipment. To prevent electromagnetic interference with electric appliances such as radios and televisions, use shielded cables and connectors for connections.

D8 10 3a_A1_En

This product is for general household purposes. Any failure due to use for other than household purposes (such as long term use for business purposes in a restaurant or use in a car or ship) and which requires repair will be charged for even during the warranty period.

K041_A1_En

WARNING
Store small parts out of the reach of children and infants. If accidentally swallowed, contact a doctor immediately.

D41 6 4_A1_En

The Safety of Your Ears is in Your Hands
Get the most out of your equipment by playing it at a safe level a level that lets the sound come through clearly without annoying blaring or distortion and, most importantly, without affecting your sensitive hearing. Sound can be deceiving. Over time, your hearing "comfort level" adapts to higher volumes of sound, so what sounds "normal" can actually be loud and harmful to your hearing. Guard against this by setting your equipment at a safe level BEFORE your hearing adapts.

ESTABLISH A SAFE LEVEL:
- Set your volume control at a low setting.
- Slowly increase the sound until you can hear it comfortably and clearly, without distortion.
- Once you have established a comfortable sound level, set the dial and leave it there.

BE SURE TO OBSERVE THE FOLLOWING GUIDELINES:
- Do not turn up the volume so high that you can't hear what's around you.
- Use caution or temporarily discontinue use in potentially hazardous situations.
- Do not use headphones while operating a motorized vehicle; the use of headphones may create a traffic hazard and is illegal in many areas.

S001a_A1_En

SC 99 only

FEDERAL COMMUNICATIONS COMMISSION DECLARATION OF CONFORMITY
This device complies with part 15 of the FCC Rules. Operation is subject to the following two conditions: (1) This device may not cause harmful interference, and (2) this device must accept any interference received, including interference that may cause undesired operation.

Product Name:	AV Receiver
Model Number:	SC 99
Responsible Party Name:	PIONEER ELECTRONICS (USA) INC. SERVICE SUPPORT DIVISION
Address:	1925 E. DOMINGUEZ ST. LONG BEACH, CA 90810 1003, U.S.A.
Phone:	1 800 421 1404
URL:	http://www.pioneerelectronics.com

D8 10 4*_C1_En

This transmitter must not be co located or operated in conjunction with any other antenna or transmitter.

D8 9 2 5_A1_En

5.15 5.25 GHz band is restricted to indoor operations only.

D8 9 2 6_A1_En

This equipment complies with FCC radiation exposure limits set forth for an uncontrolled environment and meets the FCC radio frequency (RF) Exposure Guidelines. This equipment should be installed and operated keeping the radiator at least 20 cm or more away from person's body (excluding extremities: hands, wrists, feet and ankles).

D8 9 2 7 2_A2_En

This equipment complies with IC radiation exposure limits set forth for an uncontrolled environment and meets RSS 102 of the IC radio frequency (RF) Exposure rules. This equipment should be installed and operated keeping the radiator at least 20 cm or more away from person's body (excluding extremities: hands, wrists, feet and ankles).

D8 9 2 7 4_A1_En

This device complies with Industry Canada licence exempt RSS standard(s). Operation is subject to the following two conditions: (1) this device may not cause interference, and (2) this device must accept any interference, including interference that may cause undesired operation of the device.

D8 9 10 1_A1_En

Thank you for buying this Pioneer product. Please read through these operating instructions so you will know how to operate your model properly.

Contents

01 Before you start

Our philosophy....8
Features....8
Checking what's in the box....10
Installing the receiver....11
Loading the batteries....11
Operating range of remote control unit....11

02 Controls and displays

Remote control....13
Display....15
Front panel....16

03 Connecting your equipment

Connecting your equipment....19
Rear panel....19
Determining the speakers' application....20
Placing the speakers....24
Connecting the speakers....26
Installing your speaker system....27
About the audio connection....36
About the video converter....37
About HDMI....37
Connecting your TV and playback components....38
Connecting an HDD/DVD recorder, BD recorder and other video sources....40
Connecting a satellite/cable receiver or other set-top box....41
Connecting other audio components....42
Connecting additional amplifiers....42
Connecting the multichannel analog inputs....43
Connecting AM/FM antennas....43
Making MULTI-ZONE connections....44
Connecting to the network through LAN interface....47
Connecting an iPod....47
Connecting a USB device....48
Connecting an MHL-compatible device....48
Connecting an HDMI-equipped component to the front panel input....48
Using a USB cable to connect to a computer....48
Connecting an IR receiver....49
Switching components on and off using the 12 volt trigger....49
Plugging in the receiver....49

04 Basic Setup

Initial settings of this receiver....51
Setting with a special application (Start-up Navi)....51
Perform settings using the AVNavigator built into this receiver....51
Setting by referring to the operating instructions....53
Setting network connection....53
Automatically conducting optimum sound tuning (Full Auto MCACC)....59
The Input Setup menu....61
Changing the OSD display language (OSD Language)....62

05 Basic playback

Playing a source....64
Playing an iPod....65
Playing a USB device....66
Playing an MHL-compatible device....67
Playing music from a computer....68
Listening to the radio....68
Music playback using *Bluetooth* wireless technology....69

06 Listening to your system

Enjoying various types of playback using the listening modes....73
Selecting MCACC presets....75
Choosing the input signal....75
Better sound using Phase Control....75
Better sound using Phase Control and Full Band Phase Control....76

07 Playback with NETWORK features

Introduction....78
Playback with Network functions....79
About network playback....81
About playable file formats....83

08 Control with HDMI function

About the Control with HDMI function....85
Making Control with HDMI connections....85
HDMI Setup....85
Before using synchronization....86
About synchronized operations....86
Setting the PQLS function....87
About Sound Retriever Link and Stream Smoother Link....87
Cautions on the Control with HDMI function....87

09 Using other functions

Setting the Audio options 89
Setting the Video options 91
Switching the output (OUTPUT PARAMETER) 93
HDMI 4K/60p signal input setting 94
Changing the channel level while listening 94
Using the MULTI-ZONE controls 95
Making an audio or a video recording 96
Network settings from a web browser 96
Using the sleep timer 96
Dimming the display 96
Checking your system settings 96
Resetting the system 97

10 Controlling the rest of your system

About the Remote Setup menu 99
Operating multiple receivers 99
Setting the remote to control other components 99
Selecting preset codes directly 99
Programming signals from other remote controls 100
Erasing one of the remote control button settings 100
Erasing all learnt settings that are in one input function 100
Using All Zone Standby 101
Setting the switching time for the receiver operation mode 101
Resetting the remote control settings 101
Controlling components 102

11 The MCACC PRO menu

Making receiver settings from the MCACC PRO menu 105
Automatic MCACC (Expert) 105
Manual MCACC setup 107
Checking MCACC Data 109
Data Management 110

12 The System Setup and Other Setup menus

Making receiver settings from the System Setup menu 113
Manual speaker setup 113
MHL Setup 115
The Other Setup menu 116
Making network settings using Safari 119
Using Safari to set a friendly name 119
Using Safari to update the firmware 119

13 FAQ

Troubleshooting 122
Power 122
No sound 122
Other audio problems 123
BT AUDIO 124
Video 124
Settings 125
Professional Calibration EQ graphical output 125
Display 125
Remote control 126
HDMI 126
MHL 127
Built-in AVNavigator 127
USB interface 127
iPod 128
Network 128
USB-DAC 130
Wireless LAN 130

14 Additional information

About Wi-Fi® 132
SABRE DAC™ 132
About HDMI 132
HTC Connect 132
About iPod 132
Windows 8 132
MHL 133
About *Bluetooth* wireless technology 133
High-Resolution Audio 133
Software license notice 133
Surround sound formats 138
Auto Surround, ALC and Stream Direct with different input signal formats 139
Speaker Setting Guide 140
About messages displayed when using network functions 141
Important information regarding the HDMI connection 141
Cleaning the unit 141
Glossary 142
Features index 145
Specifications 146
Preset code list 148

Flow of settings on the receiver

Flow for connecting and setting the receiver

The unit is a full-fledged AV receiver equipped with an abundance of functions and terminals. It can be used easily after following the procedure below to make the connections and settings.
Required setting item: **1**, **2**, **3**, **4**, **5**, **8**, **10**
Setting to be made as necessary: **6**, **7**, **9**, **11**, **12**, **13**, **14**

Important
Using **Wiring Navi** on AVNavigator of this receiver, you can make the initial settings of the receiver on your computer or mobile device. In that case, you can use **Wiring Navi** to make the same connections or settings that are performed in Steps **2**, **3**, **4**, **5**, **6**, **8**, and **9**. For details of how to use AVNavigator, refer to How to use the built-in AVNavigator on page 51.

1 Before you start
- Checking what's in the box on page 10
- Loading the batteries on page 11

⬇

2 Determining the speakers' application (page 20)
- [A] 7.2.2 channel surround system (Surround back/Top middle) connection
- [B] Dolby Enabled Speaker system connection
- [C] 9.2.2 channel surround system (Top middle/Front height) connection
- [D] 7.2.4 channel surround (Surround back Pre Out) connection
- [E] 7.2.4 channel surround (Front Pre Out) connection
- [F] 7.2.2 channel surround system & Front Bi-amping connection (High quality surround)
- [G] 7.2.2 channel surround system & Speaker B connection
- [H] 7.2 channel surround system & HDZONE connection (Multi Zone)
- [I] 5.2 channel surround system & Front Bi-amping connection (High quality surround) & HDZONE connection (Multi Zone)
- [J] 5.2 channel surround system & Speaker B Bi-amping connection
- [K] 5.2 channel surround system & Front and Surround Bi-amping connection (High quality surround)
- [L] 5.2 channel surround system & Front and Center Bi-amping connection (High quality surround)
- [M] 5.2 channel surround system & Center and Surround Bi-amping connection (High quality surround)
- [N-1] Multi-ZONE Music connection
  [N-2] 5.2 channel surround system & ZONE 2/HDZONE connection (Multi Zone)
  [N-3] 5.2 channel surround system & ZONE 2/ZONE 3 connection (Multi Zone)

⬇

3 Connecting the speakers
- Placing the speakers on page 24
- Connecting the speakers on page 26
- Installing your speaker system on page 27
- Bi-amping your speakers on page 26

⬇

4 Connecting the components
- About the audio connection on page 36
- About the video converter on page 37
- Connecting your TV and playback components on page 38
- Connecting AM/FM antennas on page 43
- Plugging in the receiver on page 49

⬇

5 Power On

⬇

6 Changing the OSD display language (OSD Language) (page 62)

⬇

7 Using the AVNavigator functions (page 51)

⬇

8 MCACC speaker settings
- Automatically conducting optimum sound tuning (Full Auto MCACC) on page 59

⬇

9 The Input Setup menu (page 61)
(When using connections other than the recommended connections)

⬇

10 Basic playback (page 63)

⬇

11 Switching the HDMI output (page 94)

⬇

12 Adjusting the sound and picture quality as desired
- Using the various listening modes (page 72)
- Better sound using Phase Control (page 75)
- Measuring the all EQ type (SYMMETRY/ALL CH ADJ/FRONT ALIGN) (page 105)
- Changing the channel level while listening (page 115)
- Switching on/off the Acoustic Calibration EQ, Auto Sound Retriever or Dialog Enhancement (page 89)
- Setting the PQLS function (page 87)
- Setting the Audio options (page 89)
- Setting the Video options (page 91)

⬇

13 Other optional adjustments and settings
- Control with HDMI function (page 84)
- The MCACC PRO menu (page 104)
- The System Setup and Other Setup menus (page 112)

⬇

14 Making maximum use of the remote control
- Operating multiple receivers (page 99)
- Setting the remote to control other components (page 99)

Before you start

Our philosophy 8
Features 8
Checking what's in the box 10
Installing the receiver 11
Loading the batteries 11
Operating range of remote control unit 11

Our philosophy

Pioneer is dedicated to making your home theater listening experience as close as possible to the vision of the moviemakers and mastering engineer when they created the original soundtrack. We do this by focusing on three important steps:

1 **Achieving the highest possible sound quality**

2 **Allowing for customized acoustic calibration according to any listening area**

3 **Fine-tuning the receiver with the help of world-class studio engineers**

With the cooperation of AIR Studios, this receiver has been designated AIR Studios Monitor:

Features

Audio

- **AIR Studios Sound Tuning**

The SC-99 and SC-97 have received the AIR Studios Monitor certification. Pioneer has a proven track record of applying its audio expertise to the creation of multi-channel sound environments. Established in 1969 in London, AIR Studios is now an acclaimed recording complex, favoured by many of the world's most popular and renowned musical talents.

- **Dolby Atmos**

This AV receiver supports the latest Dolby Atmos surround sound system. Dolby Atmos is a new technology in which, through real time calculation of audio data and meta data (position and time information) included in the audio signal, a surround sound space is achieved irrespective of the speaker layout and number of speakers. Dolby Atmos contents are required to enjoy Dolby Atmos. For Blu-ray discs with Dolby Atmos, Dolby Atmos can be played by connecting most conventional Blu-ray discs with this receiver using HDMI.

- **Class D Amplifier**

This unit is an AV receiver developed based on the latest high performance Class D amplifier and integrating the essence of Pioneer's high sound quality designs. This new generation reference amplifier offers outstanding performance with high sound quality and reproduces the latest in multi-channel digital contents.

- **ESS-32bit-DAC-equipped**

All channels are equipped with ESS SABRE 32 Ultra Audio DACs. The Jitter Eliminators achieve clearer sound.

- **Audio Scaler**

The combined effect of Hi-bit 32 Audio Processing, the digital filter and the up-sampling function can be used to convert the signals of music files or CDs to up to 192 kHz/32 bits to achieve even clearer sound with higher definition.

- **Hi-Bit 32 Audio Processing**

Creates a wider dynamic range with digital sources like CDs, DVDs or BDs. 16-, 20- and 24-bit PCM as well as compressed audio is requantized to 32 bits, and the high frequency component is interpolated upon data processing to enable smoother, more subtle musical expression.

- **Easy setup using MCACC PRO**

The Auto MCACC Setup provides a quick but accurate surround sound setup, which includes the advanced features of Professional Acoustic Calibration EQ.

- **Auto Phase Control Plus**

For discs created with standards other than Phase Control, the LFE channel is delayed upon recording in the first place. This function automatically corrects phase shifting on such discs and broadcasts. This function is particularly effective when playing multi-channel music containing low frequency effects (LFE).

- **Full Band Phase Control (compatible with FRONT ALIGN)**

The further advanced Full Band Phase Control technology focuses on the group delay in the speaker network filter, and compensates with special digital signal processing (DSP), to adjust the phase of each unit as well as the group delay for each speaker. Full Band Phase Control gives multi-range speakers the sound coherence of full-range speakers, while retaining the wide frequency range advantage.
This is compatible with the FRONT ALIGN function for matching the characteristics of the speakers other than the front speakers with those of the front speakers.

- **PQLS Bit-stream**

Jitterless high quality playback is possible by connecting a PQLS-compatible player with HDMI connections. This feature is only available when the connected Pioneer Blu-ray Disc Player supports the PQLS function.

- **Independent dual subwoofer output**

The output for two subwoofers can be adjusted and set independently. When using two subwoofers, more ideal low-frequency playback can be realized by properly adjusting the output to each woofer.

- **Subwoofer EQ**

The EQ for subwoofer output can be corrected. In addition to the results of MCACC automatic adjustment, the subwoofer output can be adjusted to match the viewing environment or your taste by manual correction.

- **Virtual Speakers**

By turning on the Virtual Surround Back', 'Virtual Height', and 'Virtual Wide' modes, it is possible to realize a maximum of 11.1 channels combining the speakers that are actually installed and the virtual speakers. This makes for a smoother connection between the sounds and an improved 3D feel.

- **dts Neo:X compatible**

This receiver supports the latest DTS processing format. The quality of Neo:X, originally designed for 9 channels or more, can be enjoyed in a 7-channel environment.

Video

- **Ultra HD (with 4K/60p video support) - Pass-through and upscaling -**

Up to 4K/60p resolution images can be passed through and displayed as such, and the HD (High Definition) or Full HD images of DVDs, Blu-ray discs and HD broadcasts can be upscaled to a resolution of up to 4K/60p and displayed. A separate monitor supporting Ultra HD (4K video) is required.

- **HDMI (4K/60p, 3D, Audio Return Channel)**

A compatible component is required to use the above function.

- **HDCP 2.2**

This receiver is compatible with the HDCP 2.2 standard, which has stringent copyright protection technology.

Network

- **Built-in Wi-Fi**

This receiver is compatible with Wi-Fi standards, and supports the 2.4 GHz and 5 GHz dual bands.

- **Wireless Direct**

With this receiver, you can enjoy music playback without a router by direct wireless connection using an iPhone or other Wi-Fi mobile device.

- **Spotify Connect**

Spotify is a digital music-streaming service that gives you access to millions of songs instantly. This receiver is ready for Spotify Connect, which lets you play music on your audio system, using the Spotify app as a remote. For service availability in your country check www.spotify.com.

- **Compatible with Windows 8.1**

This receiver is compatible with Windows 8.1, letting you easily stream music from compatible PCs on your home network.

- **Apple AirPlay**

With AirPlay you can stream music from iTunes to this receiver and play it through your home theater system. You can even use the receiver to view metadata including song titles, artist's names as well as the album art on a connected display. You can easily enjoy your iTunes music in any room in the house.

- **DLNA Certified (1.5)**

This receiver is a DLNA certified (1.5) device, enabled to work not only as a DMP (Digital Media Player) for playing DMS (Digital Media Server) audio files, but also as a DMR (Digital Media Renderer) to be controlled remotely by a device such as a smartphone or PC.

- **Internet Radio**

When you connect this receiver to the network, you can listen to internet radio from around the world. You can register your favorite broadcasting stations in this receiver.

- **Multi-channel Music File playback**

This receiver enables multi-channel music file playback with a resolution of up to 96 kHz/24 bit. Playback of WAV and FLAC files via the front USB port and network is supported.

- **DSD File Music playback (via Network, Front USB and HDMI)**

Playback of high sound quality DSD music (DSD files and DSD discs (SACDs)) is supported.

- **High Resolution Music Playback**

High resolution music files with resolutions of 96 kHz/24 bit to 192 kHz/24 bit can be played. Playback of AIFF, Apple Lossless, WAV and FLAC files via the front USB port and network is supported.

- **Gapless Playback**

The silent section between tracks is skipped when playing music files, eliminating the interruptions that usually occur when playing live or concert contents.
This receiver plays back AAC or MP3 format files with a minimum gap even though it is fundamentally impossible to play back without a gap.

Connectivity

- **USB-DAC (NATIVE DSD and LPCM transmission supported)**

SC-99 only
Music files on a computer can be played by connecting the receiver with the computer using a commercially available USB cable.
Files can be played with high sound quality when the exclusive driver is installed on the computer. The driver software can be installed from the included CD-ROM.
Native DSD playback by DoP (DSD over PCM) transmission is supported.

- **Built-in *Bluetooth* Wireless Technology**

This receiver, equipped with *Bluetooth* wireless technology, lets you enjoy music files on an iPhone or other *Bluetooth* wireless technology enabled device wirelessly.

- **MHL™ (Mobile High-definition Link)-compatible device playback**

An incorporates MHL 2 mobile device can be connected to enjoy 3D videos, full-HD videos, high quality multi-channel audio, and photos etc., with charge the battery on the receiver.

- **HTC Connect**

HTC Connect makes it easy to wirelessly stream your favorite music straight from your HTC phone. There's no need for a separate app; HTC Connect is built right in your phone's music player.

- **iPod Playback**

Your iPod and iPhone can be connected to the receiver's USB terminal to play the music files on the iPod or iPhone. Also, the iPod or iPhone is charged when it is connected to the receiver.

Installation

● Built-in AVNavigator

With the built-in AVNavigator embedded in this receiver, **Wiring Navi** can be used to interactively connect and set initial settings of this receiver with a smart phone, tablet, PC, and Mac through a home network. In addition, **Interactive Operation Guide** can also be used, which visually explains the functions and operation by actually experiencing the operation with contents linked with the main device.

● iControlAV5 Remote Application

This is an application that allows intuitive operation of many of the receiver's functions. This application is available on the App Store for iPhone, iPod touch and iPad. You can also get it on Google Play for Android smartphones. The application can be downloaded free of charge.

● HDZONE output

This receiver supports output of the HDMI output to a subzone room. Powerful images can be enjoyed simply by connecting this receiver to a TV supporting 4K/Full-HD/3D. In addition, a multi-channel environment can be created by connecting this receiver to another AV receiver in the subzone room.

● ZONE Ready

This receiver is equipped with HDZONE, ZONE 2 and ZONE 3. HDZONE supports HD audio/video streaming to a separate room via HDMI. Multi-Zone enables music and movie playback from different sources in three zones at the same time.
With HDZONE, you can select not only HDMI input but also **INTERNET RADIO** or **iPod/USB** and the like.

● Energy Saving Design

This AV receiver has an ecological design. In addition to even lower power consumption in standby, the receiver is equipped with an 'eco mode' for low power consumption when playing contents as well. Furthermore, the eco mode can easily be set with a dedicated button on the remote control of using iControlAV5.

Checking what's in the box

Please check that you've received the following supplied accessories:

- Setup microphone (cable: 5 m (16.4 ft.))
- Remote control unit
- AAA size IEC R03 dry cell batteries (to confirm system operation) x2
- AM loop antenna
- FM wire antenna
- Power cord
- CD-ROM
- Quick start guide
- Safety Brochure
- Warranty sheet

Note

The illustrations are modified and simplified for explanation purposes and may be different from the actual product.

Handling the CD-ROM

Precautions For Use

- This CD-ROM is for use with a personal computer. It cannot be used with a DVD player or music CD player. Attempting to play this CD-ROM with a DVD player or music CD player can damage speakers or cause impaired hearing due to the large volume.

License

- Please agree to the "Terms of Use" indicated below before using this CD-ROM. Do not use if you are unwilling to consent to the terms of its use.

Terms of Use

- Copyright to data provided on this CD-ROM belongs to Onkyo & Pioneer Corporation. Unauthorized transfer, duplication, broadcast, public transmission, translation, sales, lending or other such matters that go beyond the scope of "personal use" or "citation" as defined by Copyright Law may be subject to punitive actions. Permission to use this CD-ROM is granted under license by Onkyo & Pioneer Corporation.

General Disclaimer

- Onkyo & Pioneer Corporation does not guarantee the operation of this CD-ROM with respect to personal computers using any of the applicable OS. In addition, Onkyo & Pioneer Corporation is not liable for any damages incurred as a result of use of this CD-ROM and is not responsible for any compensation. The names of private corporations, products and other entities described herein are the registered trademarks or trademarks of their respective firms.

Installing the receiver

- When installing this unit, make sure to put it on a level and stable surface.
- Don't install it on the following places:
  - on a color TV (the screen may distort)
  - near a cassette deck (or close to a device that gives off a magnetic field). This may interfere with the sound.
  - in direct sunlight
  - in damp or wet areas
  - in extremely hot or cold areas
  - in places where there is vibration or other movement
  - in places that are very dusty
  - in places that have hot fumes or oils (such as a kitchen)
- Do not touch this receiver's bottom panel while the power is on or just after it is turned off. The bottom panel becomes hot when the power is on (or right after it is turned off) and could cause burns.

Loading the batteries

The batteries included with the unit are to check initial operations; they may not last over a long period. We recommend using alkaline batteries that have a longer life.

- The remote control setting may be restored to the default after the batteries are replaced. If this happens, reset it (page 101).

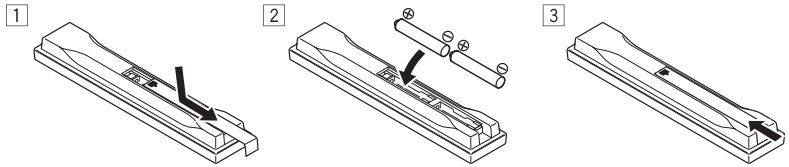

WARNING

- Do not use or store batteries in direct sunlight or other excessively hot place, such as inside a car or near a heater. This can cause batteries to leak, overheat, explode or catch fire. It can also reduce the life or performance of batteries.

CAUTION

Incorrect use of batteries may result in such hazards as leakage and bursting. Observe the following precautions:

- Never use new and old batteries together.
- Insert the plus and minus sides of the batteries properly according to the marks in the battery case.
- When inserting the batteries, make sure not to damage the springs on the battery's (–) terminals. This can cause batteries to leak or overheat.
- Batteries with the same shape may have different voltages. Do not use different batteries together.
- When disposing of used batteries, please comply with governmental regulations or environmental public institution's rules that apply in your country/area.

Operating range of remote control unit

The remote control may not work properly if:

- There are obstacles between the remote control and the receiver's remote sensor.
- Direct sunlight or fluorescent light is shining onto the remote sensor.
- The receiver is located near a device that is emitting infrared rays.
- The receiver is operated simultaneously with another infrared remote control unit.

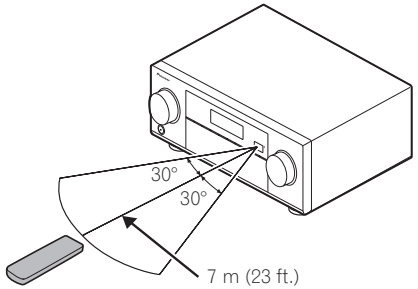

Controls and displays

Remote control 13
Display 15
Front panel 16

Remote control

This section explains how to operate the remote control for the receiver.

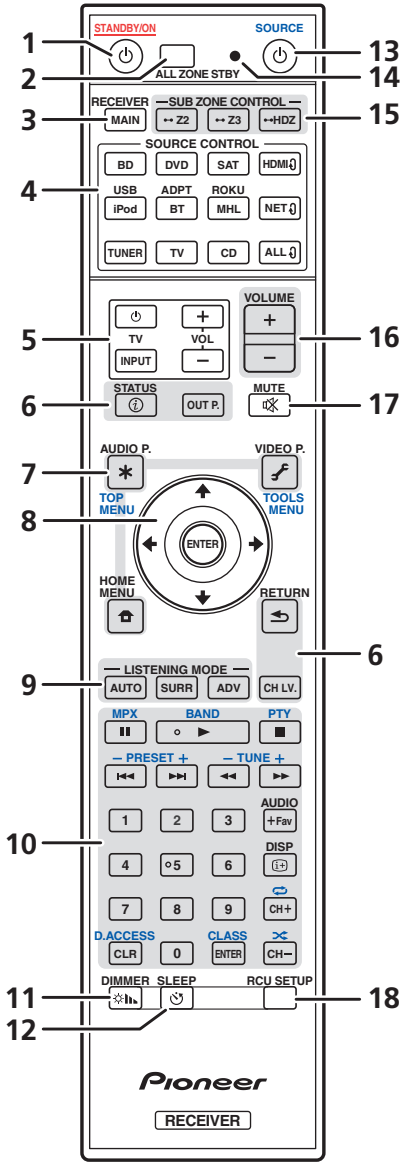

The remote has been conveniently color-coded according to component control using the following system:

- **White** – Receiver control, TV control
- **Blue** – Operation of other devices and each input (**TUNER**, etc.) (See pages 65, 66, 68, 69 and 102.)

1 ⏻ STANDBY/ON

This switches between standby and on for this receiver.

2 ALL ZONE STBY

Use this button to perform unique operations (page 101).

3 MAIN RECEIVER

Switches the remote to control the receiver (used to select the white commands).
Switch to perform operations in the main zone.

4 SOURCE CONTROL buttons

Switches the input. Also, switches remote control operation mode for operating other devices or each input (**TUNER**, etc.) (page 99).
The input for **HDMI**⇕, **NET**⇕ and **ALL**⇕ switches each time these buttons are pressed.

5 TV control buttons

These buttons can be used to perform operations on the TV to which the **TV INPUT** button is assigned. The TV can be operated with these buttons regardless of the input set for the remote control's operation mode (page 99).

6 Receiver Control buttons

- **STATUS** – Displays the IP address and information such as selected/set functions and input signals on the display (page 96).
- **OUT P.** (OUTPUT PARAMETER) – Switches the output terminal of the HDMI signal or speaker terminal to be played (page 93).
- **RETURN** – Press to confirm and exit the current menu screen.
- **CH LV.** (CHANNEL LEVEL) – Press repeatedly to select a channel, then use ⬅/➡ to adjust the level (pages 94 and 115).

7 Receiver setting buttons

Press **MAIN RECEIVER** first to access:

- **AUDIO P.** (AUDIO PARAMETER) – Use to access the Audio options (page 89).
- **VIDEO P.** (VIDEO PARAMETER) – Use to access the Video options (page 91).
- **HOME MENU** – Use to access the Home Menu (pages 61, 62, 85, 105 and 113).

8 ⬆/⬇/⬅/➡/ENTER

Use the arrow buttons when setting up your surround sound system (see page 105) and the Audio or Video options (page 89 or 91).

9 LISTENING MODE buttons

- **AUTO** (AUTO SURROUND/ALC/STREAM DIRECT) – Switches between Auto Surround (page 73), Auto Level Control mode and Stream Direct mode (page 74).
- **SURR** (STANDARD SURROUND) – Press for Standard decoding and to switch various modes (Dolby, DTS, etc.) (page 73).
- **ADV** (ADVANCED SURROUND) – Use to switch between the various surround modes (page 74).

10 Source device operation button

Operates other devices or each input (**TUNER**, etc.).

11 DIMMER

Dims or brightens the display (page 96).

12 SLEEP

Use to put the receiver in sleep mode and select the amount of time before sleep (page 96).

13 ⏻ SOURCE
Press to turn on/off the power to the Pioneer device connected to the receiver.

14 Remote control LED
Lights when a command is sent from the remote control.

15 SUB ZONE CONTROL buttons
- **Z2** (ZONE 2) – Holding down this button (for 1.5 seconds) until the remote control LED flashes one time, the mode changes to Zone 2 operation.
- **Z3** (ZONE 3) – Holding down this button (for 1.5 seconds) until the remote control LED flashes one time, the mode changes to Zone 3 operation.
- **HDZ** (HDZONE) – Holding down this button (for 1.5 seconds) until the remote control LED flashes one time, the mode changes to HDZONE operation.

16 VOLUME +/–
Use to set the listening volume.
To adjust the main zone sound volume, press **MAIN RECEIVER** first and then press this button. When in the sub zone, press the **SUB ZONE CONTROL** button first and then press this button.

17 MUTE
Mutes the sound or restores the sound if it has been muted (adjusting the volume also restores the sound).
To mute the main zone sound volume, press **MAIN RECEIVER** first and then press this button. When in the sub zone, press the **SUB ZONE CONTROL** button first and then press this button.

18 RCU SETUP
Used to set the remote control (page 99).

Display

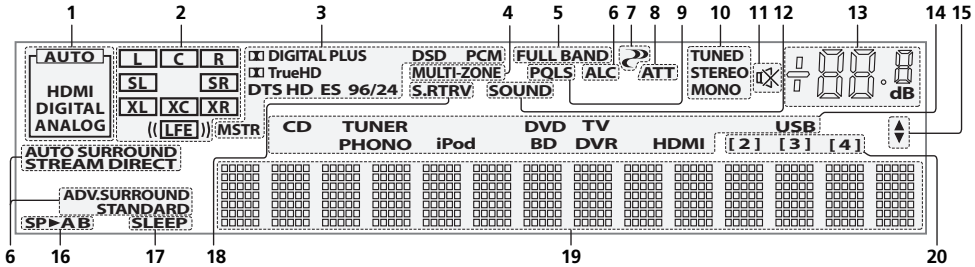

1 Signal indicators

Light to indicate the currently selected input signal. **AUTO** lights when the receiver is set to select the input signal automatically (page 75).

2 Program format indicators

Light to indicate the channels to which digital signals are being input.
With Dolby Atmos content, the light will not be on when the object base signal is being decoded.

- **L/R** – Left front/Right front channel
- **C** – Center channel
- **SL/SR** – Left surround/Right surround channel
- **LFE** – Low frequency effects channel (the **(( ))** indicators light when an LFE signal is being input)
- **XL/XR** – Two channels other than the ones above
- **XC** – Either one channel other than the ones above, the mono surround channel or matrix encode flag

3 Digital format indicators

Light when a signal encoded in the corresponding format is detected.

- **DIGITAL** – Lights with Dolby Digital decoding.
- **DIGITAL PLUS** – Lights with Dolby Digital Plus decoding.
- **TrueHD** – Lights with Dolby TrueHD decoding.
- **DTS** – Lights with DTS decoding.
- **DTS HD** – Lights with DTS-HD decoding.
- **96/24** – Lights with DTS 96/24 decoding.
- **DSD** – Lights during playback of DSD (Direct Stream Digital) signals.
- **DSD PCM** – Light during DSD (Direct Stream Digital) to PCM conversion.
- **PCM** – Lights during playback of PCM signals.
- **MSTR** – Lights during playback of DTS-HD Master Audio signals.

4 MULTI-ZONE

Lights when the MULTI-ZONE feature is active (page 95).

5 FULL BAND

Lights when the Full Band Phase Control is switched on (page 76).

6 Listening mode indicators

- **ALC** – Lights when the ALC (Auto level control) mode is selected (page 73).
- **AUTO SURROUND** – Lights when the Auto Surround feature is switched on (page 73).
- **STREAM DIRECT** – Lights when Direct/Pure Direct is selected (page 74).
- **ADV.SURROUND** – Lights when one of the Advanced Surround modes has been selected (page 74).
- **STANDARD** – Lights when one of the Standard Surround modes is switched on (page 73).

7 (PHASE CONTROL)

Lights when the Phase Control (page 75) or Full Band Phase Control (page 76) is switched on.

8 ATT

Lights when the input signal level is lowered to reduce distortion (page 89).

9 PQLS

Lights when the PQLS feature is active (page 87).

10 Tuner indicators

- **TUNED** – Lights when a broadcast is being received.
- **STEREO** – Lights when a stereo FM broadcast is being received in auto stereo mode.
- **MONO** – Lights when the mono mode is set using **MPX**.

11

Lights when the sound is muted.

12 SOUND

Lights when the **DIALOG E** (Dialog Enhancement) or **TONE** (tone controls) features is selected (page 89).

13 Master volume level

Shows the overall volume level.
"**---**" indicates the minimum level, and "**+12dB**" indicates the maximum level.

14 Input function indicators

Light to indicate the input function you have selected.

15 Scroll indicators

Light when there are more selectable items when making the various settings.

16 Speaker indicators

Lights to indicate the current speaker system using **OUT P.** (page 93).

17 SLEEP

Lights when the receiver is in sleep mode (page 96).

18 S.RTRV

Lights when the Auto Sound Retriever function is active (page 89).

19 Character display

Displays various system information.

20 Remote control mode indicator

Lights to indicate the receiver's remote control mode setting. (Not displayed when set to **1**.) (page 117)

Front panel

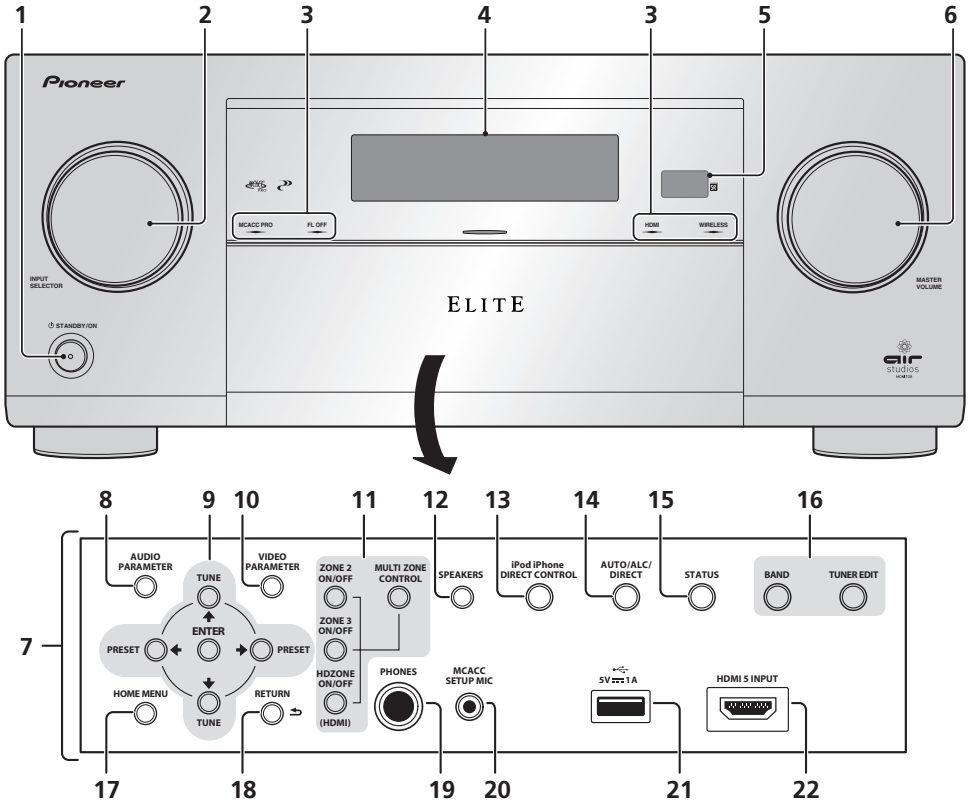

1 ⏻ STANDBY/ON
This switches between standby and on for this receiver.

2 INPUT SELECTOR dial
Use to select an input function.

3 Indicators
- **MCACC PRO** – Lights when **EQ** is set to **ON** in the **AUDIO PARAMETER** menu (page 89).
- **FL OFF** – Lights when "off" (nothing displayed) is selected with the display's dimmer adjustment (page 96).
- **HDMI** – Blinks when connecting an HDMI-equipped component; lights when the component is connected (page 38).
- **WIRELESS** – Lights when connected to the network with wireless. The light slowly blinks during WAC (Wireless Accessary Configuration) mode (page 55).

4 Character display
See Display on page 15.

5 Remote sensor
Receives the signals from the remote control (page 11).

6 MASTER VOLUME dial

7 Front panel controls
To access the front panel controls, catch the sides of the door with your fingers and pull forward.

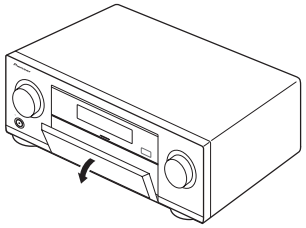

8 AUDIO PARAMETER
Use to access the Audio options (page 89).

9 ⬆/⬇/⬅/➡ (TUNE/PRESET) /ENTER
Use the arrow buttons when setting up your **HOME MENU**. Use **TUNE** ⬆/⬇ to find radio frequencies and use **PRESET** ⬅/➡ to find preset stations (page 68).

10 VIDEO PARAMETER
Use to access the Video options (page 91).

11 MULTI-ZONE controls
If you've made MULTI-ZONE connections (page 44) use these controls to control the sub zone from the main zone (page 95).

12 SPEAKERS
Use to change the speaker terminal (page 93).

13 iPod iPhone DIRECT CONTROL
Change the receiver's input to the iPod and enable iPod operations on the iPod (page 65).

14 AUTO SURR/ALC/STREAM DIRECT
Switches between Auto Surround (page 73), Auto Level Control and Stream Direct mode (page 74).

15 STATUS
Displays the IP address and information such as selected/set functions and the input signal on the display (page 96).

16 TUNER controls
- **BAND** – Switches between AM and FM radio bands (page 68).
- **TUNER EDIT** – Use with **TUNE** ⬆/⬇, **PRESET** ⬅/➡ and **ENTER** to memorize and name stations for recall (page 69).

17 HOME MENU
Use to access the Home Menu (pages 61, 62, 85, 105 and 113).

18 RETURN
Press to confirm and exit the current menu screen.

19 PHONES jack
Use to connect headphones. When the headphones are connected, there is no sound output from the speakers.

20 MCACC SETUP MIC jack
Use to connect the supplied microphone (page 59).

21 iPod/iPhone terminals

Use to connect your Apple iPod/iPhone as an audio source (page 47), or connect a USB device for audio and photo playback (page 48).

22 HDMI 5 INPUT terminal

Use for connection to a compatible HDMI device (Video camera, etc.) (page 48).

Connecting your equipment

Connecting your equipment 19
Rear panel 19
Determining the speakers' application 20
Placing the speakers 24
Connecting the speakers 26
Installing your speaker system 27
About the audio connection 36
About the video converter 37
About HDMI 37
Connecting your TV and playback components 38
Connecting an HDD/DVD recorder, BD recorder and other video sources 40
Connecting a satellite/cable receiver or other set-top box 41
Connecting other audio components 42
Connecting additional amplifiers 42
Connecting the multichannel analog inputs 43
Connecting AM/FM antennas 43
Making MULTI-ZONE connections 44
Connecting to the network through LAN interface 47
Connecting an iPod 47
Connecting a USB device 48
Connecting an MHL-compatible device 48
Connecting an HDMI-equipped component to the front panel input 48
Using a USB cable to connect to a computer 48
Connecting an IR receiver 49
Switching components on and off using the 12 volt trigger 49
Plugging in the receiver 49

Connecting your equipment

This receiver provides you with many connection possibilities, but it doesn't have to be difficult. This chapter explains the kinds of components you can connect to make up your home theater system.

CAUTION

- Before making or changing the connections, switch off the power and disconnect the power cord from the power outlet. Plugging in should be the final step.
- When making connections, also keep the power cords of the devices being connected unplugged from the power outlets.
- Depending on the device being connected (CD, DVD or BD player, etc.), the methods of connection and terminal names may differ from the explanations in this manual. Also refer to the operating instructions of the respective devices.

Important

- Illustration shows the SC-99, however connections for the SC-97 are the same except where noted.

Rear panel

SC-99

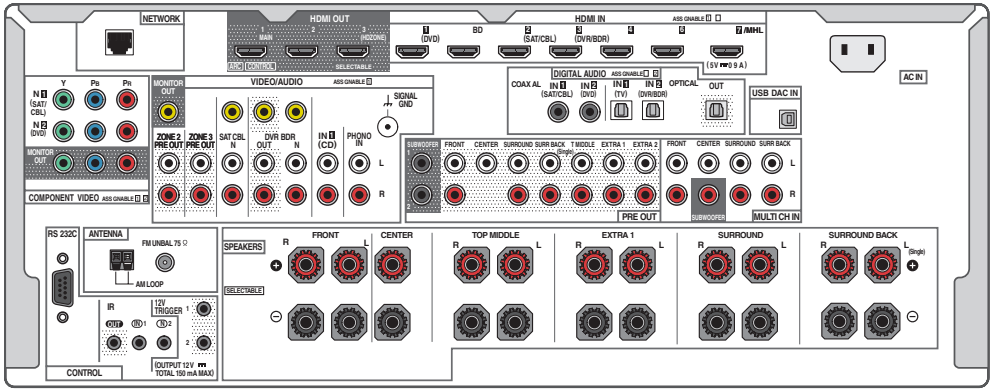

SC-97

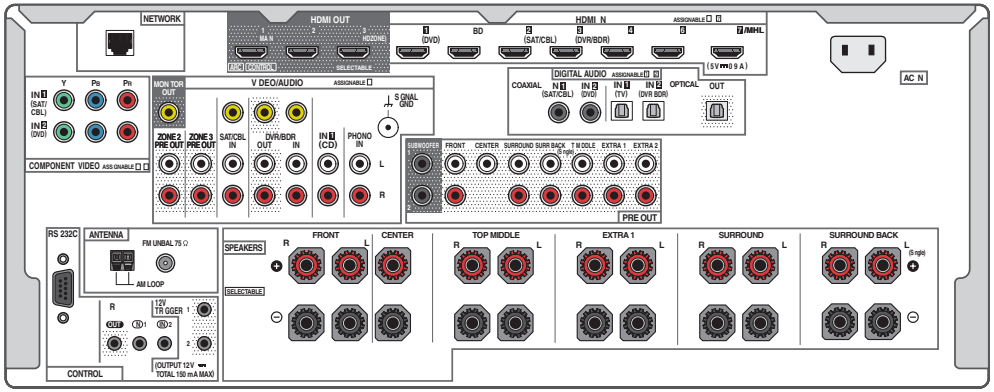

Notes

- The **RS-232C** terminal is exclusively for the installer.
- The input functions below are assigned by default to the receiver's different input terminals. Refer to The Input Setup menu on page 61 to change the assignments if other connections are used.

Input function	Input Terminals		
	HDMI	Audio	Component
BD	(BD)		
DVD	IN 1	COAX-2	IN 2
SAT/CBL	IN 2	COAX-1	IN 1
DVR/BDR	IN 3	OPT-2	
HDMI 4	IN 4		
HDMI 5 (front panel)	IN 5		
HDMI 6	IN 6		
HDMI 7/MHL	IN 7		
TV		OPT-1	
CD		ANALOG-1	

Determining the speakers' application

This unit is equipped with speaker terminals for 11 channels, allowing users to select a variety of speaker layouts/usage patterns according to their tastes. The terminals to which the speakers should be connected differ according to the speaker layout/usage pattern. Select one speaker layout/usage pattern before connecting the speakers. For instructions on connections, see Installing your speaker system on page 27.
However, the **5.2 +ZONE 2+ZONE 3** and **Multi-ZONE Music** settings can be used separately according to the situation. Normally set this to **5.2 +ZONE 2+ZONE 3** and use this for multi-zone/multi-source playback, and when using the system for home parties for example, set this to **Multi-ZONE Music** to associate all zones with the main zone.

- Be sure to connect speakers to the front left and right channels (**L** and **R**).
- It is also possible to only connect one of the surround back speakers (**SB**) or neither.
- If you have two subwoofers, the second subwoofer can be connected to the **SUBWOOFER 2** terminal. Connecting two subwoofers increases the bass sound to achieve more powerful sound reproduction.
- When none of the top middle, top forward + top backward, front height, front wide, and surround back speakers are connected, Dolby Atmos does not play.

Choose one from Plans [A] to [N] below.

Important

- The **Speaker System** setting must be made if you use any of the connections shown below other than [A] (see Speaker system setting on page 113).
- The speakers from which sound is output can be switched according to the speaker layout/usage pattern (sound is not necessarily output from all connected speakers). Use the **OUT P.** button to switch the speakers from which sound is output. For details, see Switching the speaker terminals on page 93.

[A] 7.2.2 channel surround system (Surround back/Top middle) connection

**Default setting*

- **Speaker System** setting: **7.2.2/5.2.2/7.2ch**

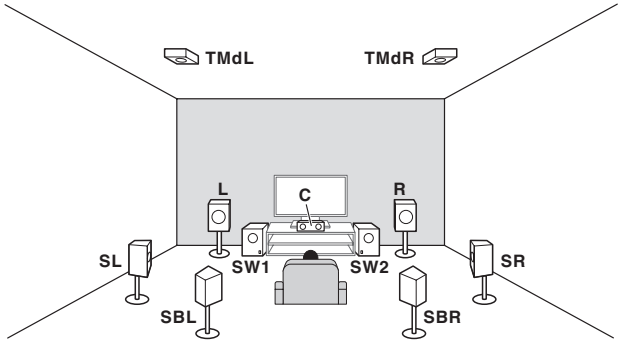

A 7.2.2 ch surround system connects the left and right front speakers (**L**/**R**), the center speaker (**C**), the left and right top middle speakers (**TMdL**/**TMdR**), the left and right surround speakers (**SL**/**SR**), the left and right surround back speakers (**SBL**/**SBR**), and the subwoofers (**SW 1**/**SW 2**).
This surround system produces a more true-to-life sound from above.
Playback of Dolby Atmos requires a connection with surround back speakers or top middle speakers.

[B] Dolby Enabled Speaker system connection

- **Speaker System** setting: **7.2.2/5.2.2/7.2ch**, **9.2.2ch TMd/FH**, **7.2.2ch Front Bi-Amp**, **7.2.2/7.2ch + SP-B**

—**Speaker Setting TMd**: **Dolby Sp (Front)**

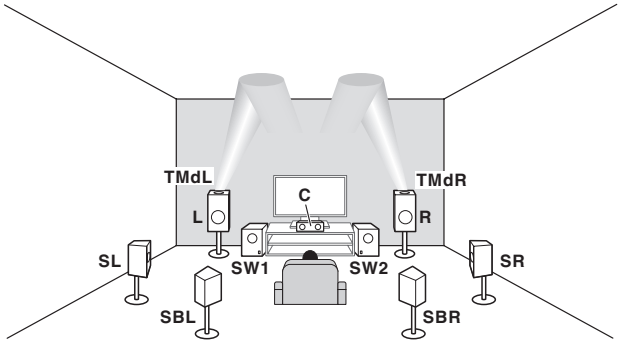

—**Speaker Setting TMd**: **Dolby Sp (Surr)**

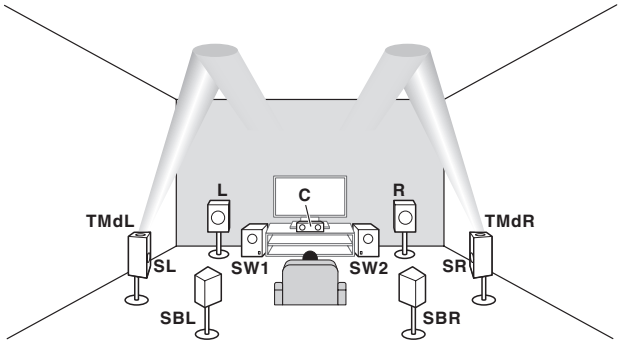

—**Speaker Setting TMd**: **Dolby Sp (SB)**

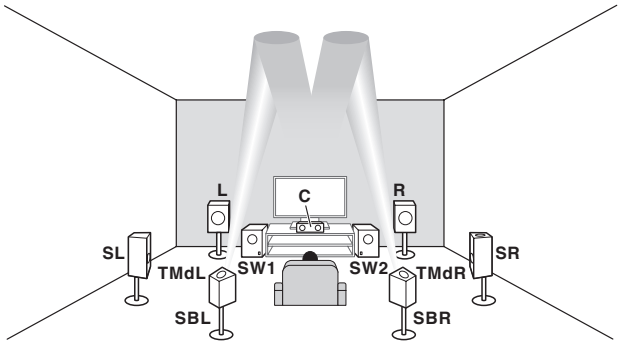

- **Speaker System** setting: **7.2.4ch SB Pre out**, **7.2.4ch Front Pre out**
  — **Speaker Setting TFw**: **Dolby Sp (Front)** and **TBw**: **Dolby Sp (Surr)**

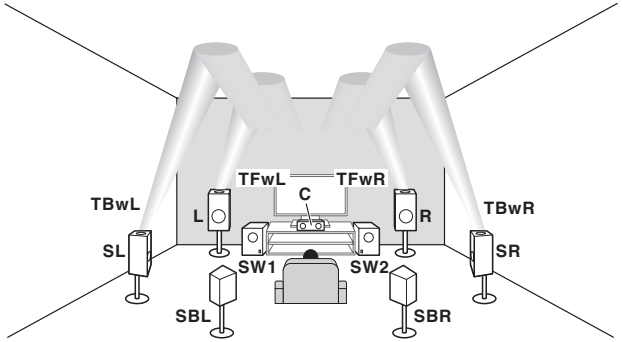

— **Speaker Setting TFw**: **Dolby Sp (Front)** and **TBw**: **Dolby Sp (SB)**

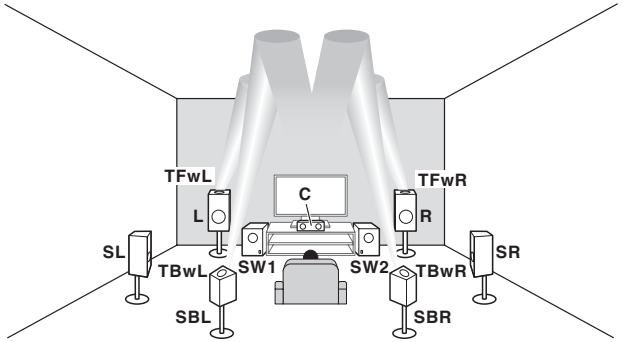

Always use the top forward (**TFwL**/**TFwR**) and top backward (**TBwL**/**TBwR**) speakers as a combination. When you set either of these speakers to **NO** in **Speaker Setting**, the other speaker will also be automatically set to **NO**.

Dolby Enabled Speaker

Dolby enabled speakers bring a new sense of height and immersion to the listening experience without installation of overhead speakers.

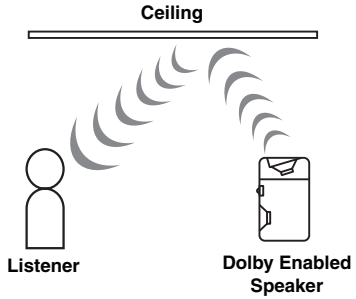

[C] 9.2.2 channel surround system (Top middle/Front height) connection

- **Speaker System** setting: **9.2.2ch TMd/FH**

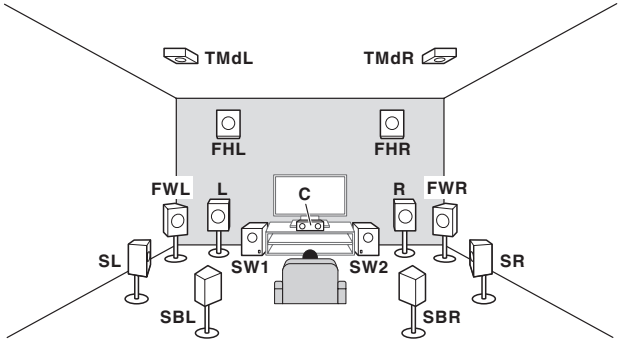

A 9.2.2 ch surround system connects the left and right front speakers (**L**/**R**), the center speaker (**C**), the left and right top middle speakers (**TMdL**/**TMdR**), the left and right front height speakers (**FHL**/**FHR**), the left and right front wide speakers (**FWL**/**FWR**), the left and right surround speakers (**SL**/**SR**), the left and right surround back speakers (**SBL**/**SBR**), and the subwoofers (**SW 1**/**SW 2**).
It is not possible to produce sound simultaneously from the top middle speakers and the front height speakers. The speakers from which sound is output can be switched using the **OUT P.** button. For details, see Switching the speaker terminals on page 93.
Front wide is output from the **PRE OUT EXTRA 2** terminals of the receiver. Connect the **EXTRA 2** terminal to the external amplifier, and connect the external amplifier to the front wide speaker.
It is necessary to connect to any one of the top middle, front height, front wide, or surround back speakers to play Dolby Atmos.

[D] 7.2.4 channel surround (Surround back Pre Out) connection

- **Speaker System** setting: **7.2.4ch SB Pre out**

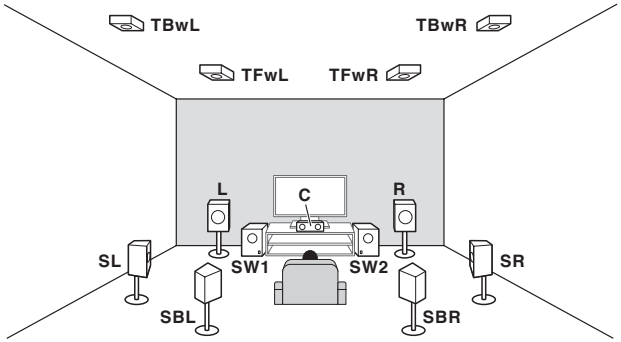

A 7.2.4 ch surround system connects the left and right front speakers (**L**/**R**), the center speaker (**C**), the left and right top forward speakers (**TFwL**/**TFwR**), the left and right top backward speakers (**TBwL**/**TBwR**), the left and right surround speakers (**SL**/**SR**), the left and right surround back speakers (**SBL**/**SBR**), and the subwoofers (**SW 1**/**SW 2**).
Surround back is output from the **PRE OUT EXTRA 2** terminals of the receiver. Connect the **EXTRA 2** terminal to the external amplifier, and connect the external amplifier to the surround back speaker.
It is necessary to connect to any one of the top forward, top backward, or surround back speakers to play Dolby Atmos.

[E] 7.2.4 channel surround (Front Pre Out) connection

- **Speaker System** setting: **7.2.4ch Front Pre out**

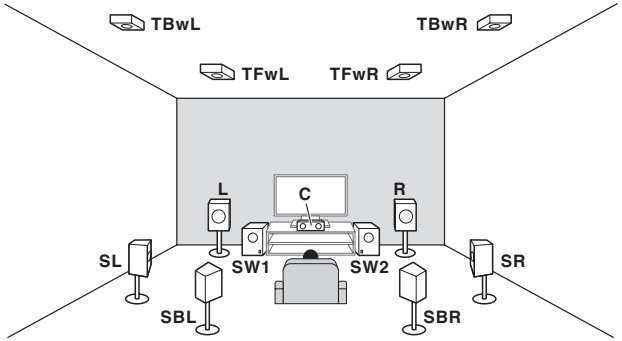

A 7.2.4 ch surround system connects the left and right front speakers (**L**/**R**), the center speaker (**C**), the left and right top forward speakers (**TFwL**/**TFwR**), the left and right top backward speakers (**TBwL**/**TBwR**), the left and right surround speakers (**SL**/**SR**), the left and right surround back speakers (**SBL**/**SBR**), and the subwoofers (**SW 1**/**SW 2**).
Front is output from the **PRE OUT EXTRA 2** terminals of the receiver. Connect the **EXTRA 2** terminal to the external amplifier, and connect the external amplifier to the front speaker.
It is necessary to connect to any one of the top forward, top backward, or surround back speakers to play Dolby Atmos.

[F] 7.2.2 channel surround system & Front Bi-amping connection (High quality surround)

- **Speaker System** setting: **7.2.2ch Front Bi-Amp**

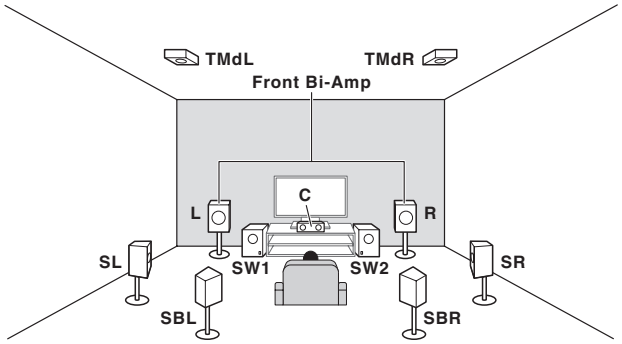

Bi-amping connection of the front speakers for high sound quality with 5.2-channel surround sound.
Top middle is output from the **PRE OUT EXTRA 2** terminals of the receiver. Connect the **EXTRA 2** terminal to the external amplifier, and connect the external amplifier to the top middle speaker.
Playback of Dolby Atmos requires a connection with surround back speakers or top middle speakers.

[G] 7.2.2 channel surround system & Speaker B connection

- **Speaker System** setting: **7.2.2/7.2ch + SP-B**

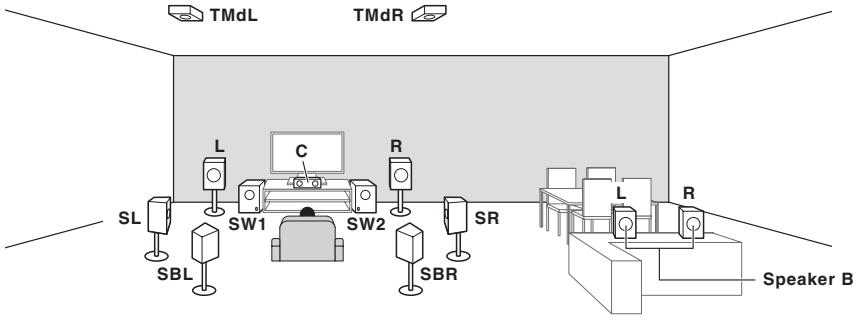

With these connections you can simultaneously enjoy 7.2-channel surround sound in the main zone with stereo playback of the same sound on the B speakers. The same connections also allow for 7.2.2-channel surround sound in the main zone when not using the B speakers.
The speakers from which sound is output can be switched using the **OUT P.** button. For details, see Switching the speaker terminals on page 93.
It is necessary to connect to the surround back or top middle speaker to play Dolby Atmos. However, when **SP:►B ON** is selected, Dolby Atmos does not play.

[H] 7.2 channel surround system & HDZONE connection (Multi Zone)

- **Speaker System** setting: **7.2ch + HDZONE**

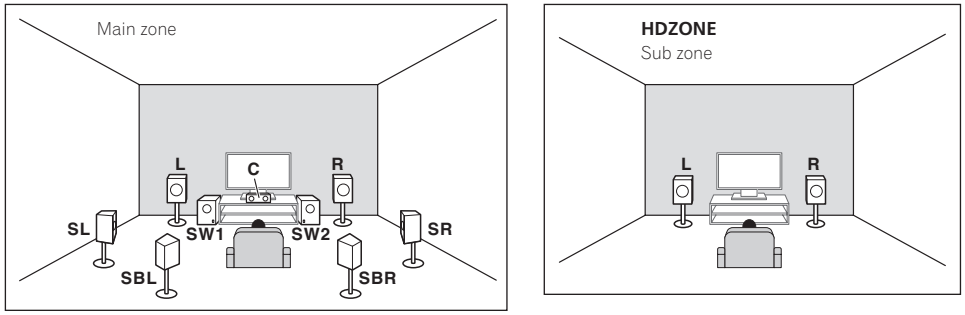

With these connections you can simultaneously enjoy 7.2-channel surround sound in the main zone with stereo playback on another component in HDZONE. (The selection of input devices is limited.)
This speaker layout/usage pattern provides 7.2-channel playback using the surround back channels in the main zone.
You cannot playback Dolby Atmos with this system.

[I] 5.2 channel surround system & Front Bi-amping connection (High quality surround) & HDZONE connection (Multi Zone)

- **Speaker System** setting: **5.2 Bi-Amp+HDZONE**

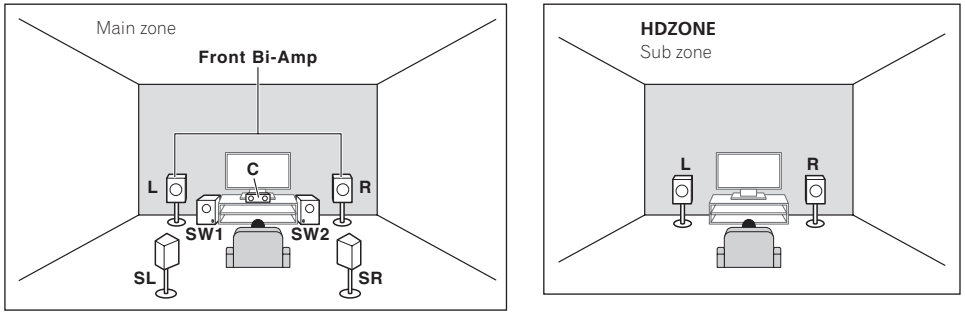

With these connections you can simultaneously enjoy Bi-amping connection of the front speakers for high sound quality with 5.2-channel surround sound in the main zone with stereo playback on another component in HDZONE. (The selection of input devices is limited.)
You cannot playback Dolby Atmos with this system.

[J] 5.2 channel surround system & Speaker B Bi-amping connection

- **Speaker System** setting: **5.2ch + SP-B Bi-Amp**

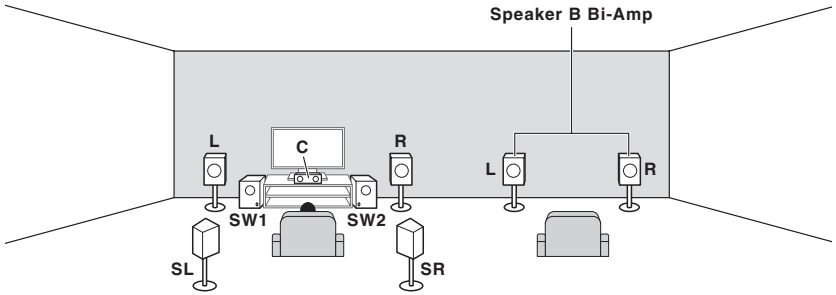

With these connections you can simultaneously enjoy 5.2-channel surround sound in the main zone with stereo playback of the same sound on the B speakers. The B speakers can be bi-amped to achieve high quality sound. The speakers from which sound is output can be switched using the **OUT P.** button. For details, see Switching the speaker terminals on page 93.
You cannot playback Dolby Atmos with this system.

[K] 5.2 channel surround system & Front and Surround Bi-amping connection (High quality surround)

- **Speaker System** setting: **5.2ch F+Surr Bi-Amp**

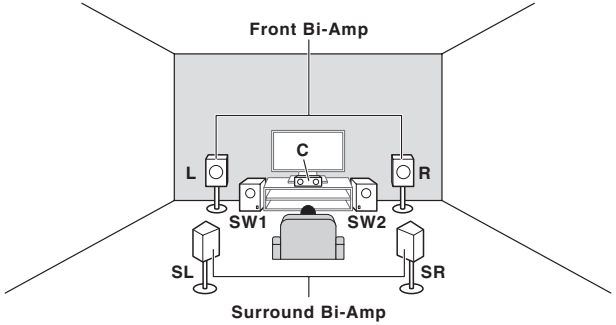

Bi-amping connection of the front and surround speakers for high sound quality with 5.2-channel surround sound.
You cannot playback Dolby Atmos with this system.

[L] 5.2 channel surround system & Front and Center Bi-amping connection (High quality surround)

- **Speaker System** setting: **5.2ch F+C Bi-Amp**

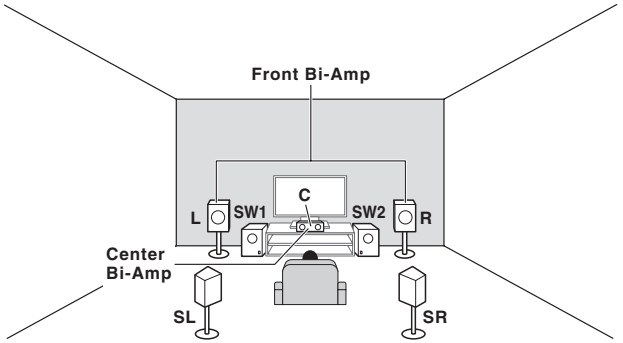

Bi-amping connection of the front and center speakers for high sound quality with 5.2-channel surround sound.
You cannot playback Dolby Atmos with this system.

[M] 5.2 channel surround system & Center and Surround Bi-amping connection (High quality surround)

- **Speaker System** setting: **5.2ch C+Surr Bi-Amp**

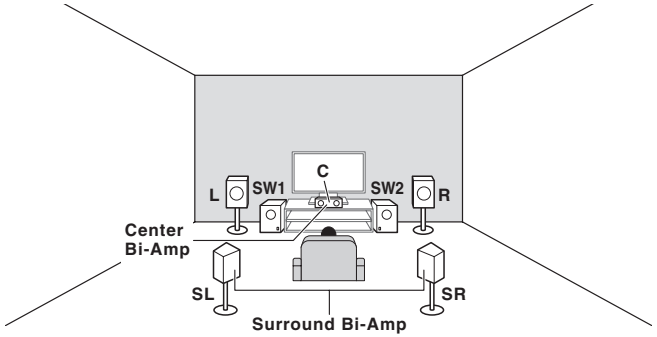

Bi-amping connection of the center and surround speakers for high sound quality with 5.2-channel surround sound.
You cannot playback Dolby Atmos with this system.

[N-1] Multi-ZONE Music connection
[N-2] 5.2 channel surround system & ZONE 2/HDZONE connection (Multi Zone)
[N-3] 5.2 channel surround system & ZONE 2/ZONE 3 connection (Multi Zone)

- [N-1] **Speaker System** setting: **Multi-ZONE Music**
- [N-2] **Speaker System** setting: **5.2 +ZONE 2+HDZONE**
- [N-3] **Speaker System** setting: **5.2 +ZONE 2+ZONE 3**

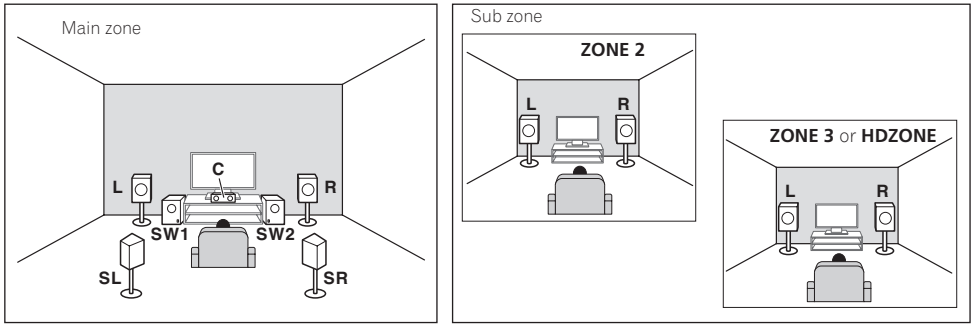

With these connections you can simultaneously enjoy 5.2-channel surround sound in the main zone with stereo playback on another component in ZONE 2, ZONE 3 and HDZONE. (The selection of input devices is limited.) However, the **5.2 +ZONE 2+ZONE 3**, **5.2 +ZONE 2+HDZONE** and **Multi-ZONE Music** settings can be used separately according to the situation. Normally set this to **5.2 +ZONE 2+ZONE 3** or **5.2 +ZONE 2+HDZONE** and use this for multi-zone/multi-source playback, and when using the system for home parties for example, set this to **Multi-ZONE Music** to associate all zones with the main zone.
You cannot playback Dolby Atmos with this system.

Other speaker connections

- Your favorite speaker connections can be selected even if you have fewer than 5.2 speakers (except front left/right speakers).
- When not connecting a subwoofer, connect speakers with low frequency reproduction capabilities to the front channel. (The subwoofer's low frequency component is played from the front speakers, so the speakers could be damaged.)
- After connecting, be sure to conduct the **Full Auto MCACC** (speaker environment setting) procedure. See Automatically conducting optimum sound tuning (Full Auto MCACC) on page 59.

Placing the speakers

Refer to the chart below for placement of the speakers you intend to connect.

Listener speaker placement guidelines

Listener speakers, such as Left, Right, Center, Left Surround, and Right Surround, are placed at ear level relative to the listener position.

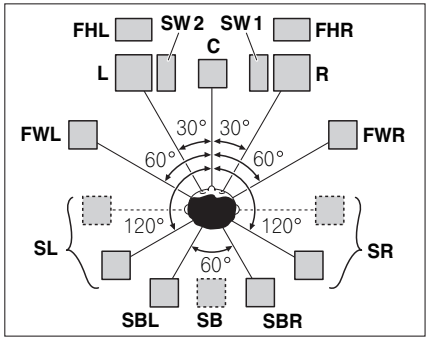

- Place the surround speakers at 120° from the center. If you, (1) use the surround back speaker, and, (2) don't use the front height speakers / front wide speakers, we recommend placing the surround speaker right beside you.
- If you intend to connect only one surround back speaker, place it directly behind you.
- Place the left and right front height speakers at least one meter (3.3 ft.) directly above the left and right front speakers.

Top speaker placement guidelines

Top speakers, such as Top Forward (**TFwL**, **TFwR**), Top Middle (**TMdL**, **TMdR**) or Top Backward (**TBwL**, **TBwR**), are placed above the listener position on the ceiling.

Layout as seen from above

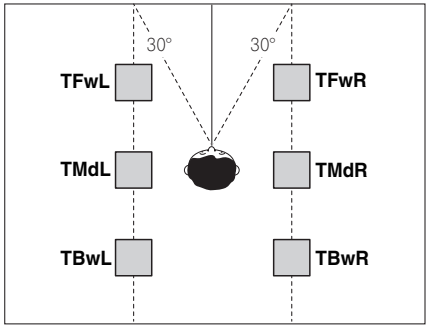

- All top speaker pairs should preferably be mounted along a vertical line that is a ±30º horizontal from the center-front reference. However, these speakers may be placed as far as the side walls and anywhere between the side walls and the middle of the room, if needed.
- We also recommend that the top forward speakers and top backward speakers be installed at a symmetrical distance from the front and rear of right above, respectively.

Layout as seen from the side

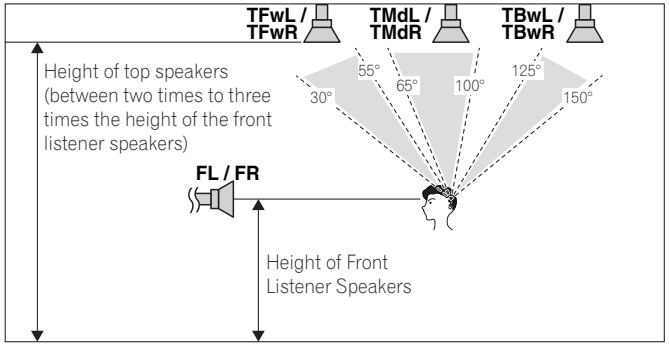

- The height of the Top Forward, Top Middle and Top Backward speakers mounted on the ceiling should preferably be no more than three times the height and no less than two times the height of the front speakers at listener height.
- The Top Forward, Top Middle and Top Backward speakers should be directed straight down, rather than directed at a central listener position.
- We recommend that the top middle speakers be installed slightly forward from right above.

Some tips for improving sound quality

Where you put your speakers in the room has a big effect on the quality of the sound. The following guidelines should help you to get the best sound from your system.

- The subwoofer can be placed on the floor. Ideally, the other speakers should be at about ear-level when you're listening to them. Putting the speakers on the floor (except the subwoofer), or mounting them very high on a wall is not recommended.
- For the best stereo effect, place the front speakers 2 m to 3 m (6 ft. to 9 ft.) apart, at equal distance from the TV.
- If you're going to place speakers around your CRT TV, use shielded speakers or place the speakers at a sufficient distance from your CRT TV.
- If you're using a center speaker, place the front speakers at a wider angle. If not, place them at a narrower angle.
- Place the center speaker above or below the TV so that the sound of the center channel is localized at the TV screen. Also, make sure the center speaker does not cross the line formed by the leading edge of the front left and right speakers.
- It is best to angle the speakers towards the listening position. The angle depends on the size of the room. Use less of an angle for bigger rooms.
- Surround and surround back speakers should be positioned 60 cm to 90 cm (2 ft. to 3 ft.) higher than your ears and tilted slightly downward. Make sure the speakers don't face each other. For DVD-Audio, the speakers should be more directly behind the listener than for home theater playback.
- Try not to place the surround speakers farther away from the listening position than the front and center speakers. Doing so can weaken the surround sound effect.

Connecting the speakers

Each speaker connection on the receiver comprises a positive (+) and negative (–) terminal. Make sure to match these up with the terminals on the speakers themselves.
This unit supports speakers with a nominal impedance of 4 Ω to 16 Ω.

CAUTION

- These speaker terminals carry **HAZARDOUS LIVE** voltage. To prevent the risk of electric shock when connecting or disconnecting the speaker cables, disconnect the power cord before touching any uninsulated parts.
- Make sure that all the bare speaker wire is twisted together and inserted fully into the speaker terminal. If any of the bare speaker wire touches the back panel it may cause the power to cut off as a safety measure.

Bare wire connections

CAUTION

Make sure that all speakers are securely installed. This not only improves sound quality, but also reduces the risk of damage or injury resulting from speakers being knocked over or falling in the event of external shocks such as earthquakes.

1 **Twist exposed wire strands together.**
2 **Loosen terminal and insert exposed wire.**
3 **Tighten terminal.**

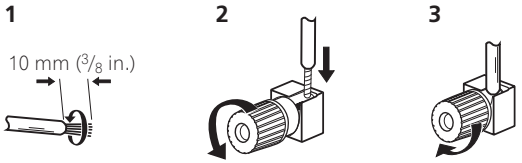

Notes

- Please refer to the manual that came with your speakers for details on how to connect the other end of the speaker cables to your speakers.
- Use an RCA cable to connect the subwoofer. It is not possible to connect using speaker cables.
- If you have two subwoofers, the second subwoofer can be connected to the **SUBWOOFER 2** terminal. Connecting two subwoofers increases the bass sound to achieve more powerful sound reproduction. In this case, the same sound is output from the two subwoofers.

Banana plug connections

If you want to use speaker cables terminated with banana plugs, screw the speaker terminal fully shut, then plug the banana plug into the end of the speaker terminal.

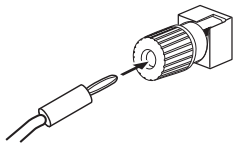

Bi-amping your speakers

Bi-amping is when you connect the high frequency driver and low frequency driver of your speakers to different amplifiers for better crossover performance. Your speakers must be bi-ampable to do this (having separate terminals for high and low) and the sound improvement will depend on the kind of speakers you're using.

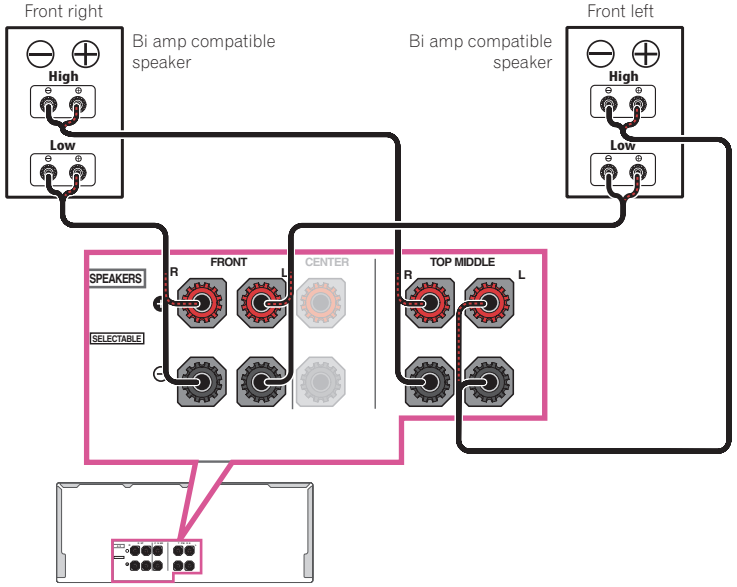

CAUTION

- Most speakers with both **High** and **Low** terminals have two metal plates that connect the **High** to the **Low** terminals. These must be removed when you are bi-amping the speakers or you could severely damage the amplifier. See your speaker manual for more information.
- If your speakers have a removable crossover network, make sure you do not remove it for bi-amping. Doing so may damage your speakers.

Bi-wiring your speakers

Your speakers can also be bi-wired if they support bi-amping.

- With these connections, the **Speaker System** setting makes no difference.

CAUTION

- Don't connect different speakers from the same terminal in this way.
- When bi-wiring as well, heed the cautions for bi-amping shown above.

● **To bi-wire a speaker, connect two speaker cords to the speaker terminal on the receiver.**

Using a banana plug for the second connection is recommended.

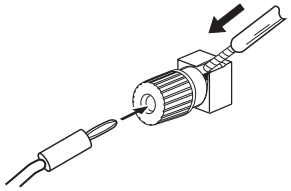

Installing your speaker system

At the very least, front left and right speakers only are necessary. Note that your main surround speakers should always be connected as a pair, but you can connect just one surround back speaker if you like (it must be connected to the left surround back terminal).

[A] 7.2.2 channel surround system (Surround back/Top middle) connection

- If necessary, select '**7.2.2/5.2.2/7.2ch**' from the **Speaker System** menu.
  See Speaker system setting on page 113 to do this.
- When only connecting one surround back speaker, connect it to the **SURROUND BACK L (Single)** terminals.
- In **Speaker Setting**, when **TMd** is set to **Dolby Sp (Front)**, **Dolby Sp (Surr)**, or **Dolby Sp (SB)**, connect the top middle channel to Dolby Enabled Speaker.

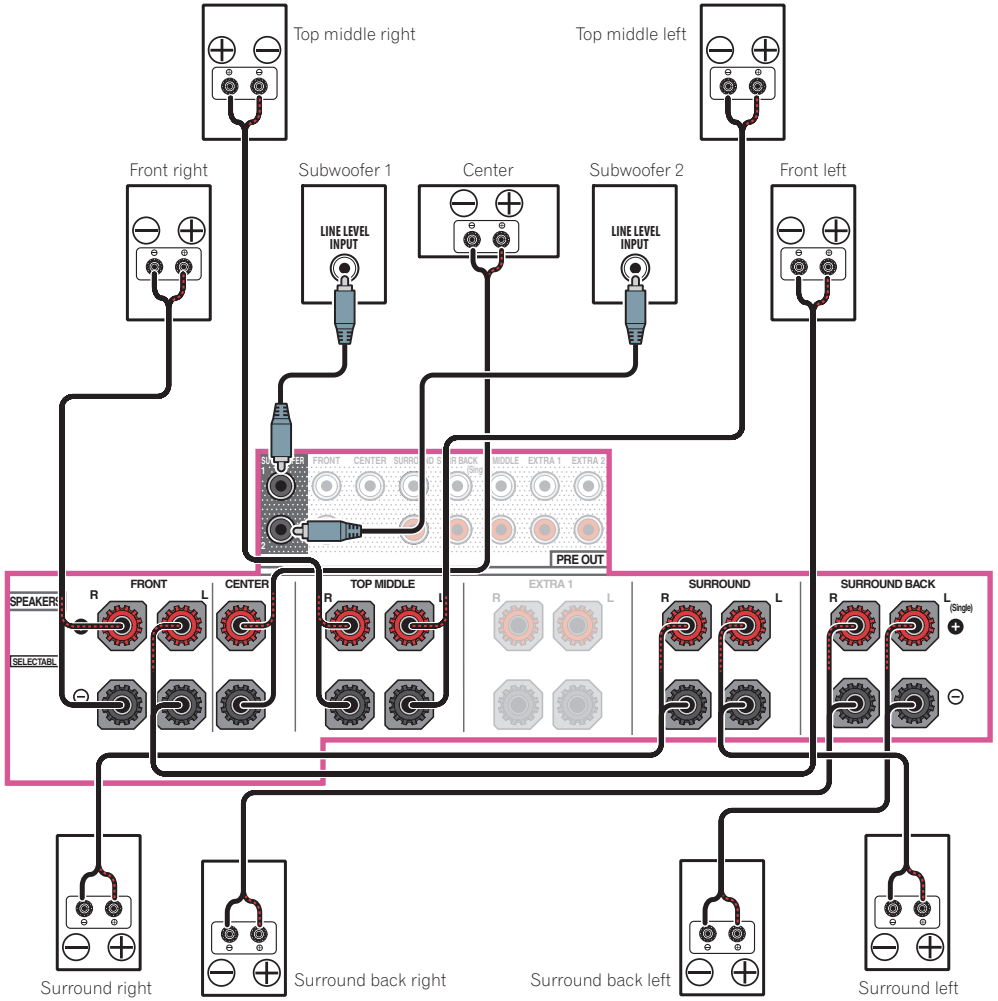

[B] Dolby Enabled Speaker system connection

Top middle channel connection

- When **Speaker System** is set to **7.2.2/5.2.2/7.2ch** (page 113)
  —When **TMd** is set to **Dolby Sp (Front)** in **Speaker Setting** (page 114)

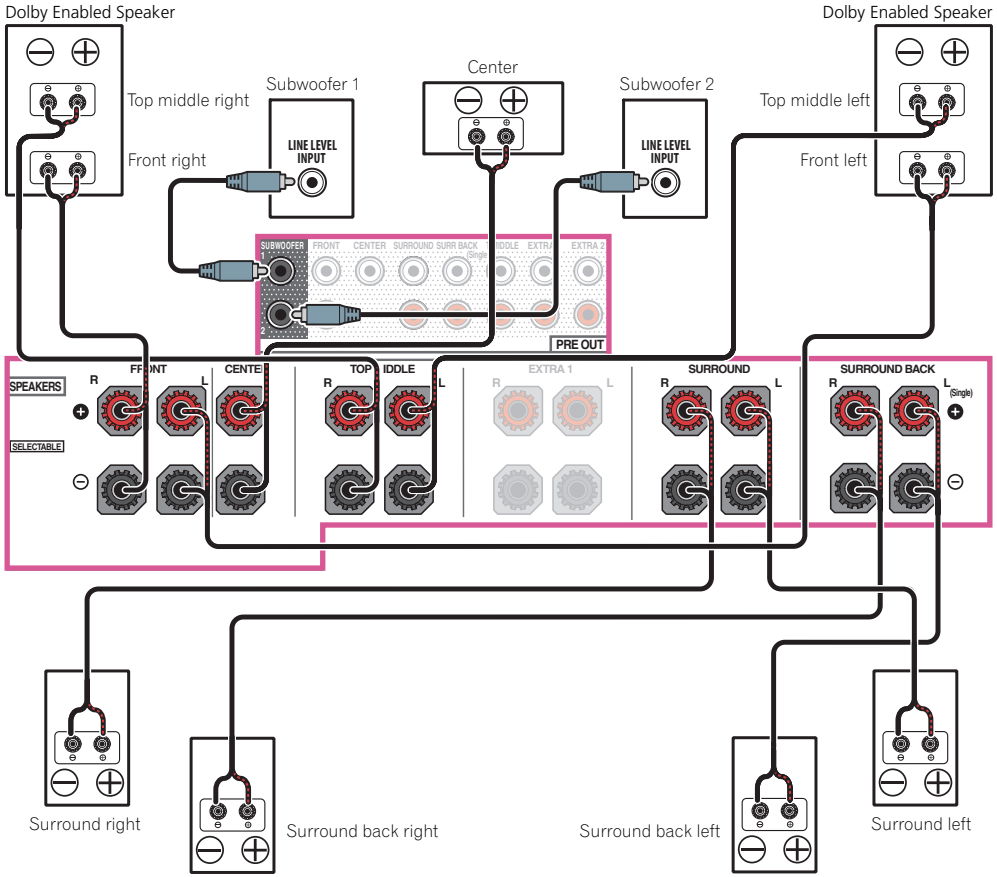

When only connecting one surround back speaker, connect it to the **SURROUND BACK L (Single)** terminals.

—When **TMd** is set to **Dolby Sp (Surr)** in **Speaker Setting** (page 114)

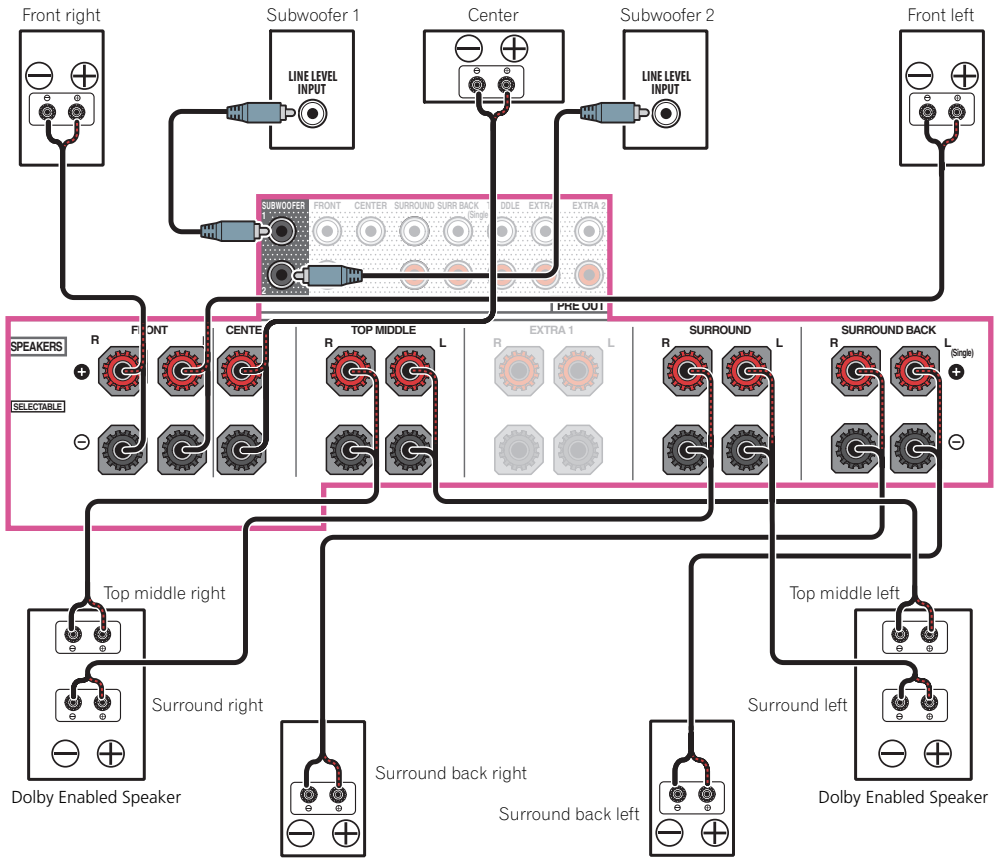

When only connecting one surround back speaker, connect it to the **SURROUND BACK L (Single)** terminals.

—When **TMd** is set to **Dolby Sp (SB)** in **Speaker Setting** (page 114)

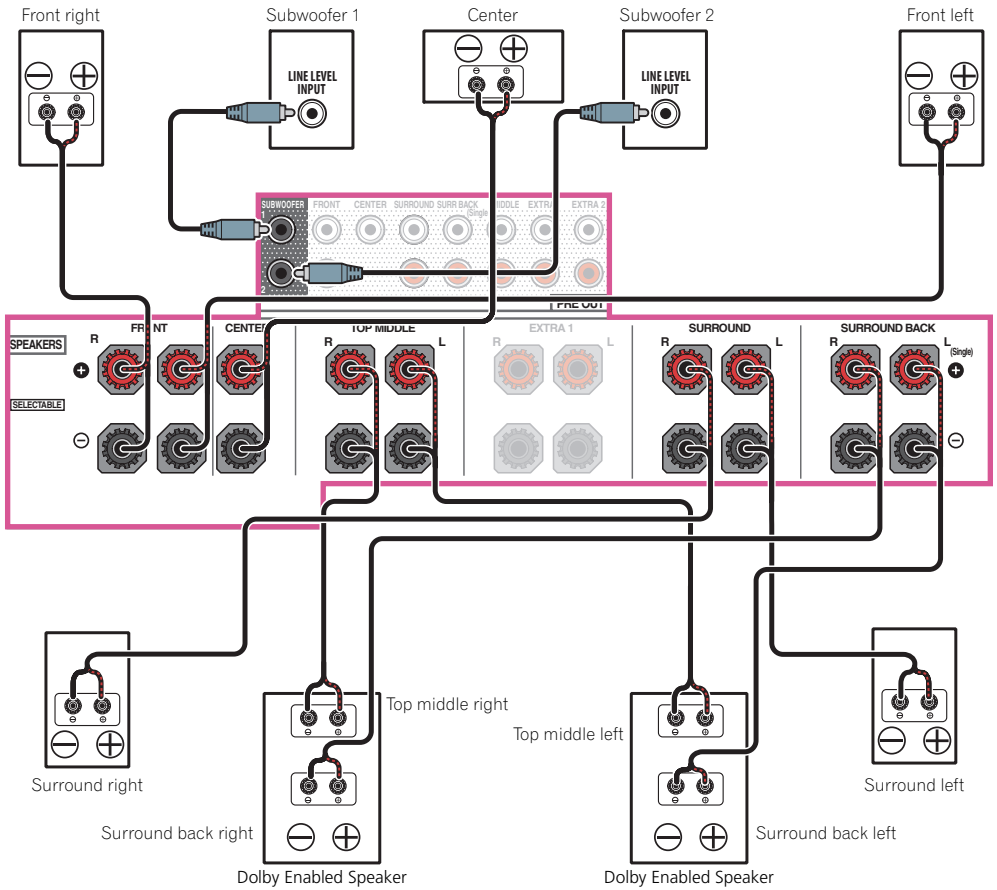

Notes

- When **Speaker System** is set to **9.2.2ch TMd/FH**, refer to [C] 9.2.2 channel surround system (Top middle/Front height) connection on page 30 to connect the top middle channel to Dolby Enabled Speaker.
- When **Speaker System** is set to **7.2.2ch Front Bi-Amp**, refer to [F] 7.2.2 channel surround system & Front Bi-amping connection (High quality surround) on page 32 to connect the top middle channel of the external amplifier to Dolby Enabled Speaker.
- When **Speaker System** is set to **7.2.2/7.2ch + SP-B**, refer to [G] 7.2.2 channel surround system & Speaker B connection on page 32 to connect the top middle channel to Dolby Enabled Speaker.

Top forward/top backward channel connection

- When **Speaker System** is set to **7.2.4ch SB Pre out** (page 113)
  —When **TFw** is set to **Dolby Sp (Front)**, and **TBw** is set to **Dolby Sp (Surr)** in **Speaker Setting** (page 114)

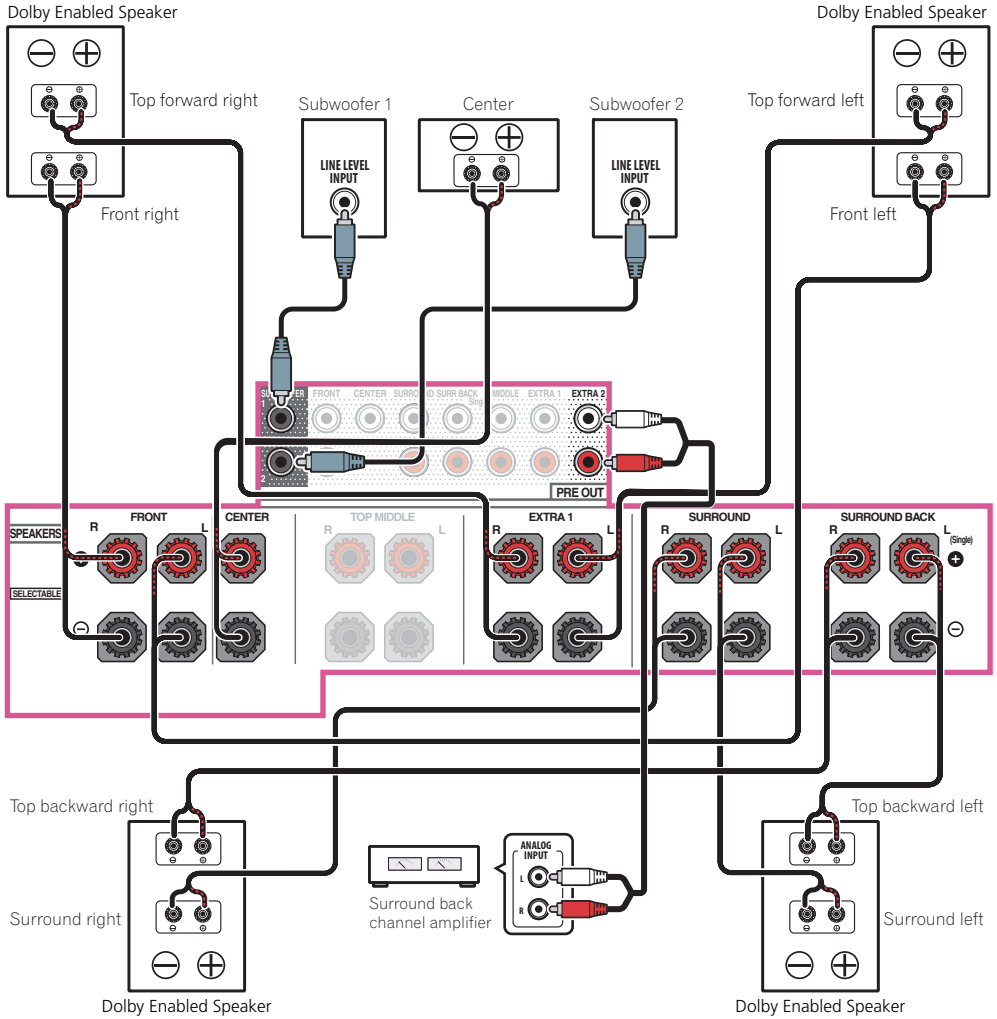

Surround back is output from the **PRE OUT EXTRA 2** terminals of the receiver. Connect the **EXTRA 2** terminal to the external amplifier, and connect the external amplifier to the surround back speaker.

—When **TFw** is set to **Dolby Sp (Front)**, and **TBw** is set to **Dolby Sp (SB)** in **Speaker Setting** (page 114)

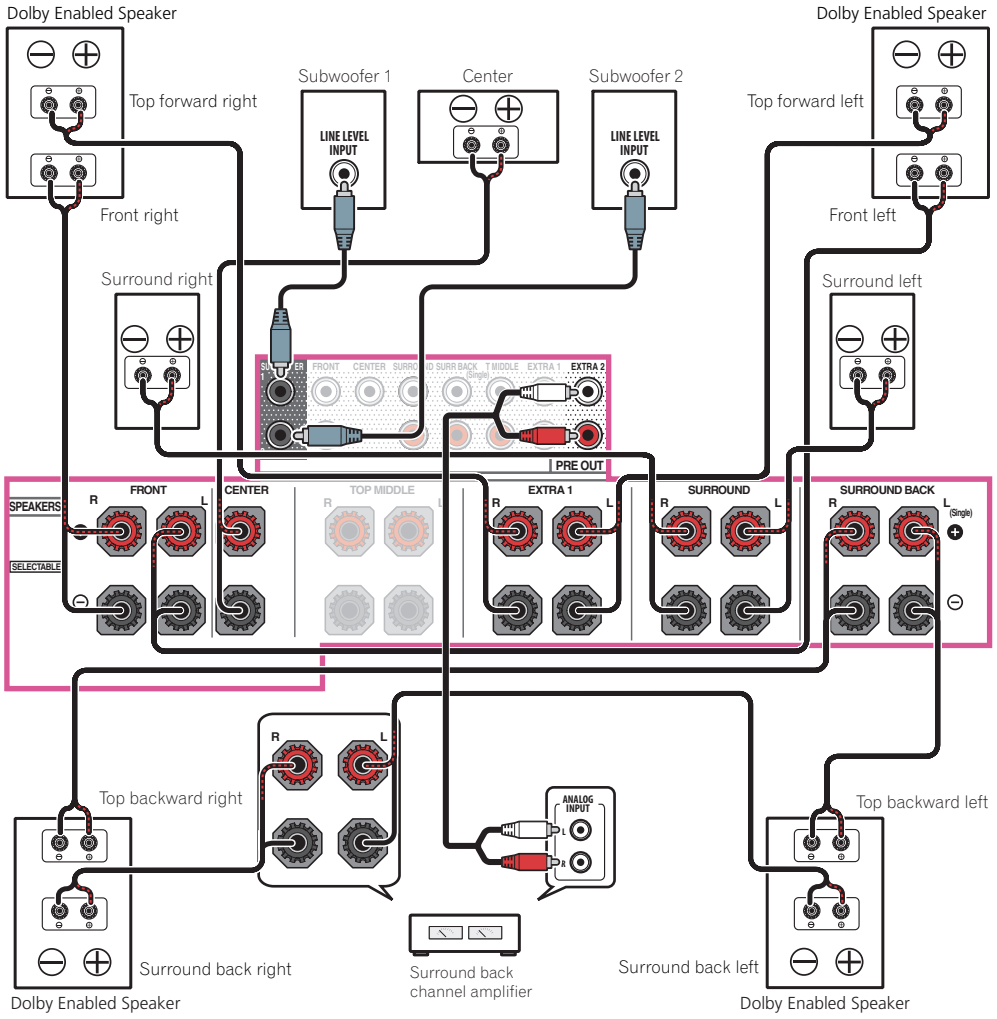

Surround back is output from the **PRE OUT EXTRA 2** terminals of the receiver. Connect the **EXTRA 2** terminal to the external amplifier, and connect the external amplifier to the surround back speaker.

Notes

- Always use the top forward (**TFwL**/**TFwR**) and top backward (**TBwL**/**TBwR**) speakers as a combination. When you set either of these speakers to **NO** in **Speaker Setting**, the other speaker will also be automatically set to **NO**.
- When **Speaker System** is set to **7.2.4ch Front Pre out**, refer to [E] 7.2.4 channel surround (Front Pre Out) connection on page 31 to connect **EXTRA 1** and front channel to Dolby Enabled Speaker.

[C] 9.2.2 channel surround system (Top middle/Front height) connection

- Select '**9.2.2ch TMd/FH**' from the **Speaker System** menu.
  See Speaker system setting on page 113 to do this.
- When only connecting one surround back speaker, connect it to the **SURROUND BACK L (Single)** terminals.
- Front wide is output from the **PRE OUT EXTRA 2** terminals of the receiver. Connect the **EXTRA 2** terminal to the external amplifier, and connect the external amplifier to the front wide speaker.
- In **Speaker Setting**, when **TMd** is set to **Dolby Sp (Front)**, **Dolby Sp (Surr)**, or **Dolby Sp (SB)**, connect the top middle channel to Dolby Enabled Speaker.

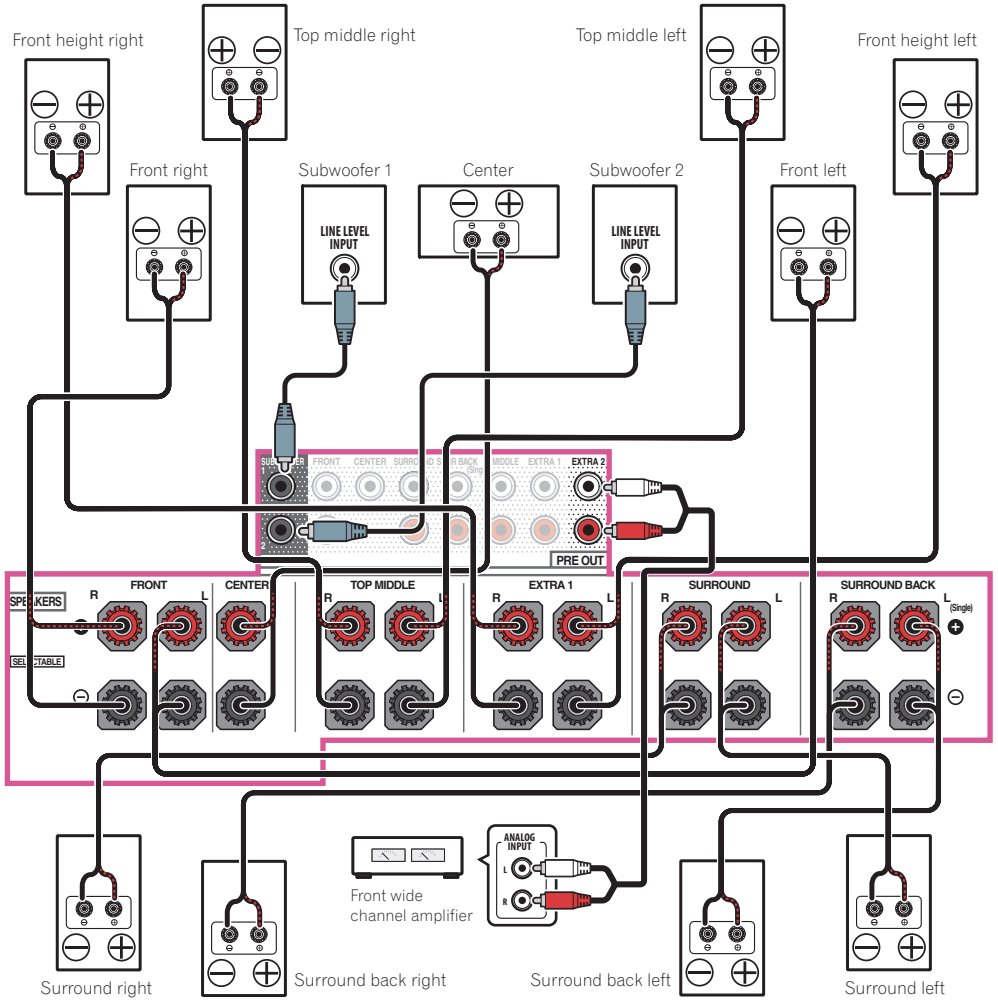

[D] 7.2.4 channel surround (Surround back Pre Out) connection

- Select '**7.2.4ch SB Pre out**' from the **Speaker System** menu.
  See Speaker system setting on page 113 to do this.
- Surround back is output from the **PRE OUT EXTRA 2** terminals of the receiver. Connect the **EXTRA 2** terminal to the external amplifier, and connect the external amplifier to the surround back speaker.
- When **TFw** is set to **Dolby Sp (Front)** in **Speaker Setting**, connect the top forward channel to Dolby Enabled Speaker.
- When **TBw** is set to **Dolby Sp (Surr)** or **Dolby Sp (SB)** in **Speaker Setting**, connect the top backward channel to Dolby Enabled Speaker.

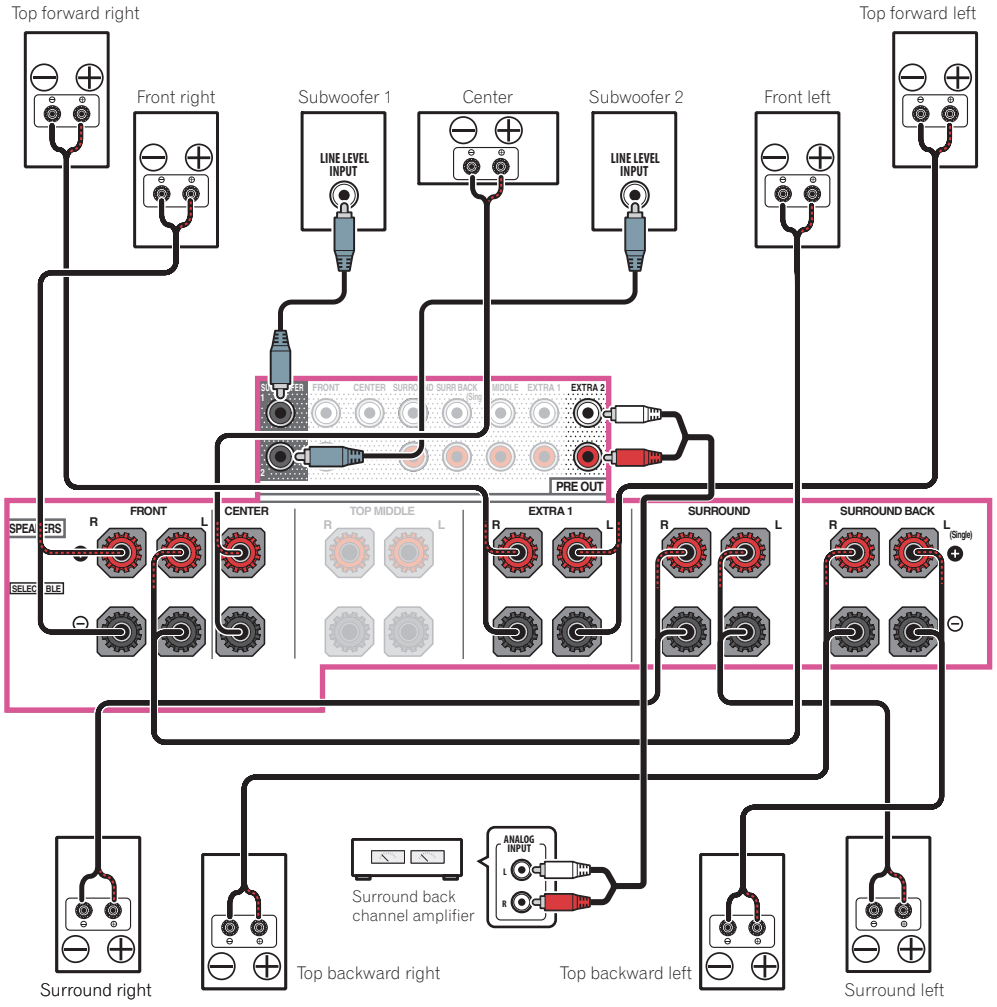

[E] 7.2.4 channel surround (Front Pre Out) connection

- Select '**7.2.4ch Front Pre out**' from the **Speaker System** menu.
  See Speaker system setting on page 113 to do this.
- When only connecting one surround back speaker, connect it to the **SURROUND BACK L (Single)** terminals.
- Front is output from the **PRE OUT EXTRA 2** terminals of the receiver. Connect the **EXTRA 2** terminal to the external amplifier, and connect the external amplifier to the front speaker.
- When **TFw** is set to **Dolby Sp (Front)** in **Speaker Setting**, connect the top forward channel to Dolby Enabled Speaker.
- When **TBw** is set to **Dolby Sp (Surr)** or **Dolby Sp (SB)** in **Speaker Setting**, connect the top backward channel to Dolby Enabled Speaker.

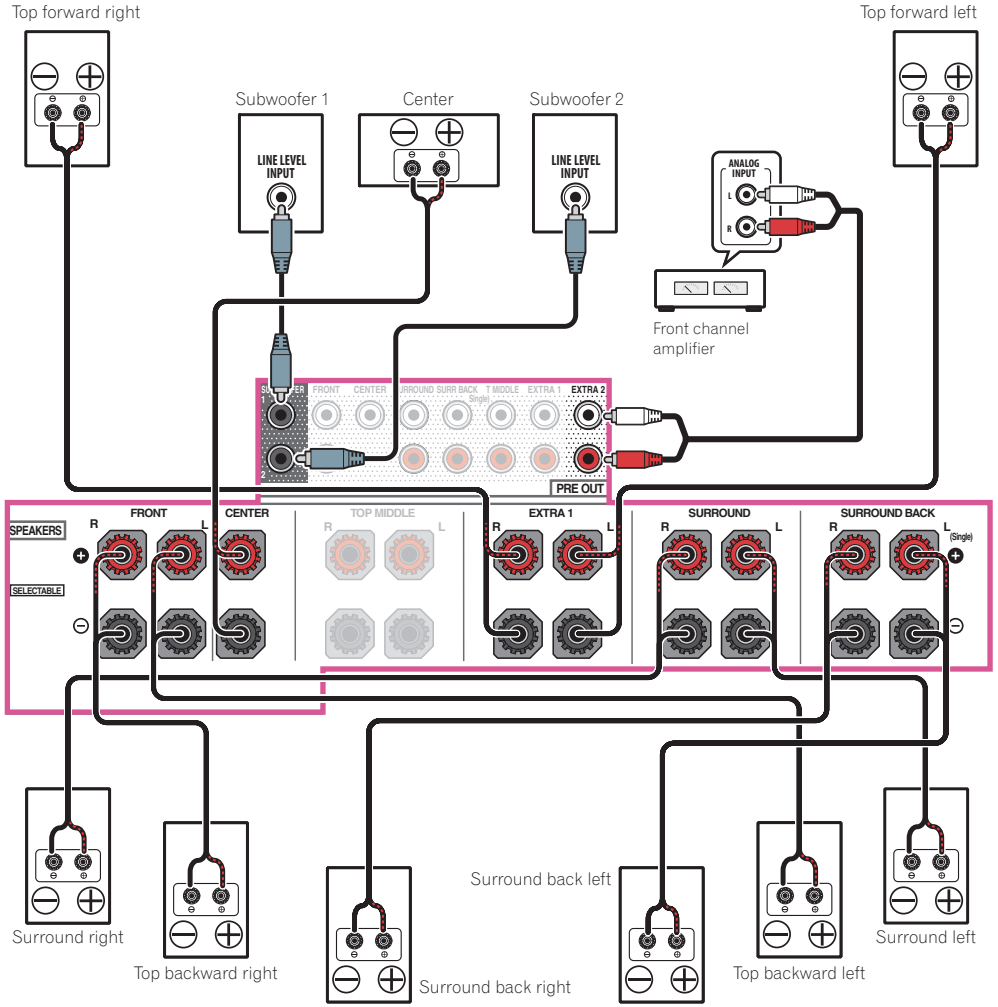

[F] 7.2.2 channel surround system & Front Bi-amping connection (High quality surround)

- Select '**7.2.2ch Front Bi-Amp**' from the **Speaker System** menu.
  See Speaker system setting on page 113 to do this.
- When only connecting one surround back speaker, connect it to the **SURROUND BACK L (Single)** terminals.
- Top middle is output from the **PRE OUT EXTRA 2** terminals of the receiver. Connect the **EXTRA 2** terminal to the external amplifier, and connect the external amplifier to the top middle speaker.
- In **Speaker Setting**, when **TMd** is set to **Dolby Sp (Front)**, **Dolby Sp (Surr)**, or **Dolby Sp (SB)**, connect the top middle channel to Dolby Enabled Speaker.

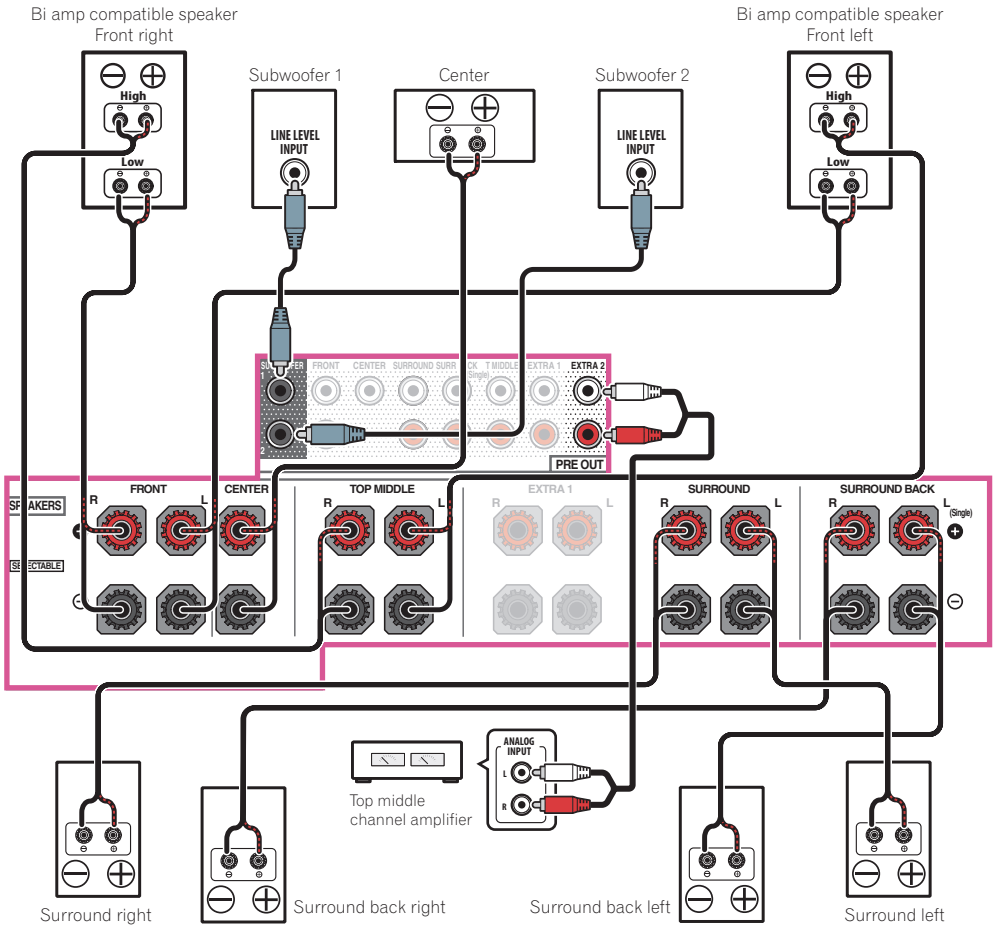

[G] 7.2.2 channel surround system & Speaker B connection

- Select '**7.2.2/7.2ch + SP-B**' from the **Speaker System** menu.
  See Speaker system setting on page 113 to do this.
- When only connecting one surround back speaker, connect it to the **SURROUND BACK L (Single)** terminals.
- In **Speaker Setting**, when **TMd** is set to **Dolby Sp (Front)**, **Dolby Sp (Surr)**, or **Dolby Sp (SB)**, connect the top middle channel to Dolby Enabled Speaker.

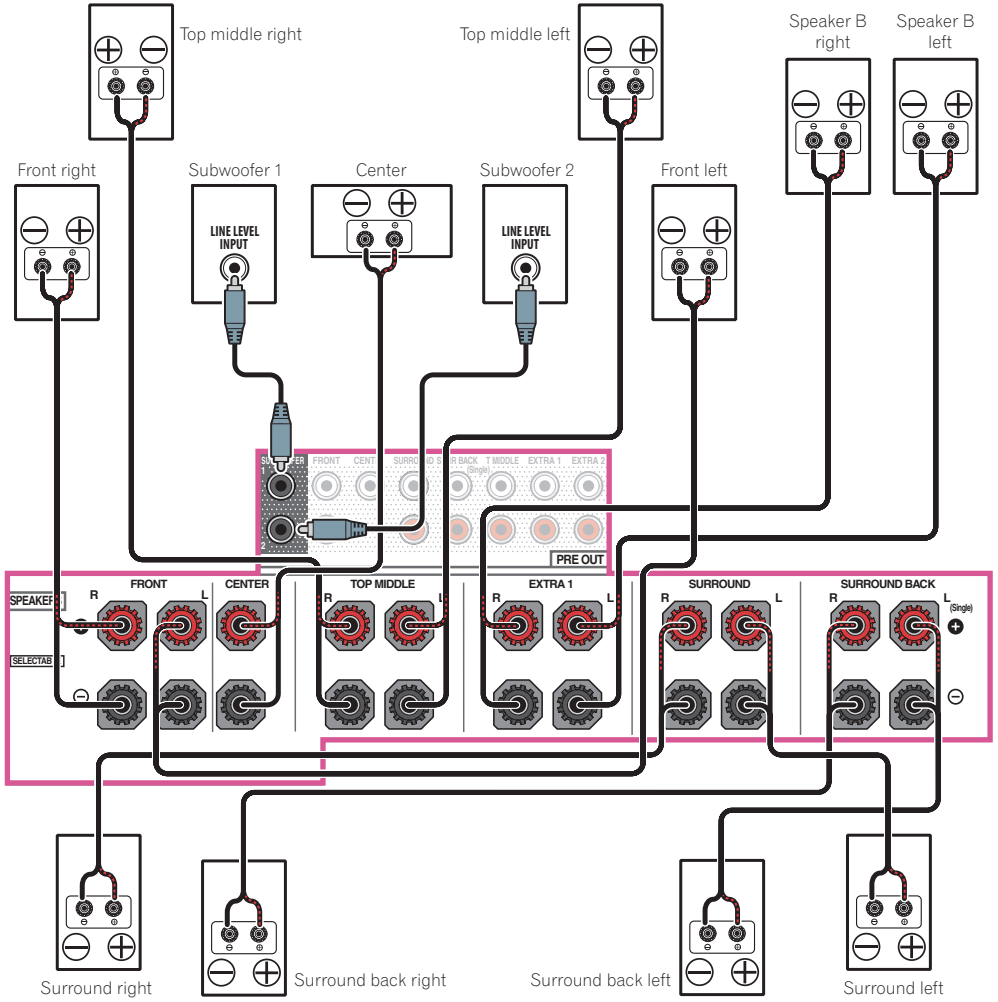

[H] 7.2 channel surround system & HDZONE connection (Multi Zone)

- Select '**7.2ch + HDZONE**' from the **Speaker System** menu.
  See Speaker system setting on page 113 to do this.
- When only connecting one surround back speaker, connect it to the **SURROUND BACK L (Single)** terminals.

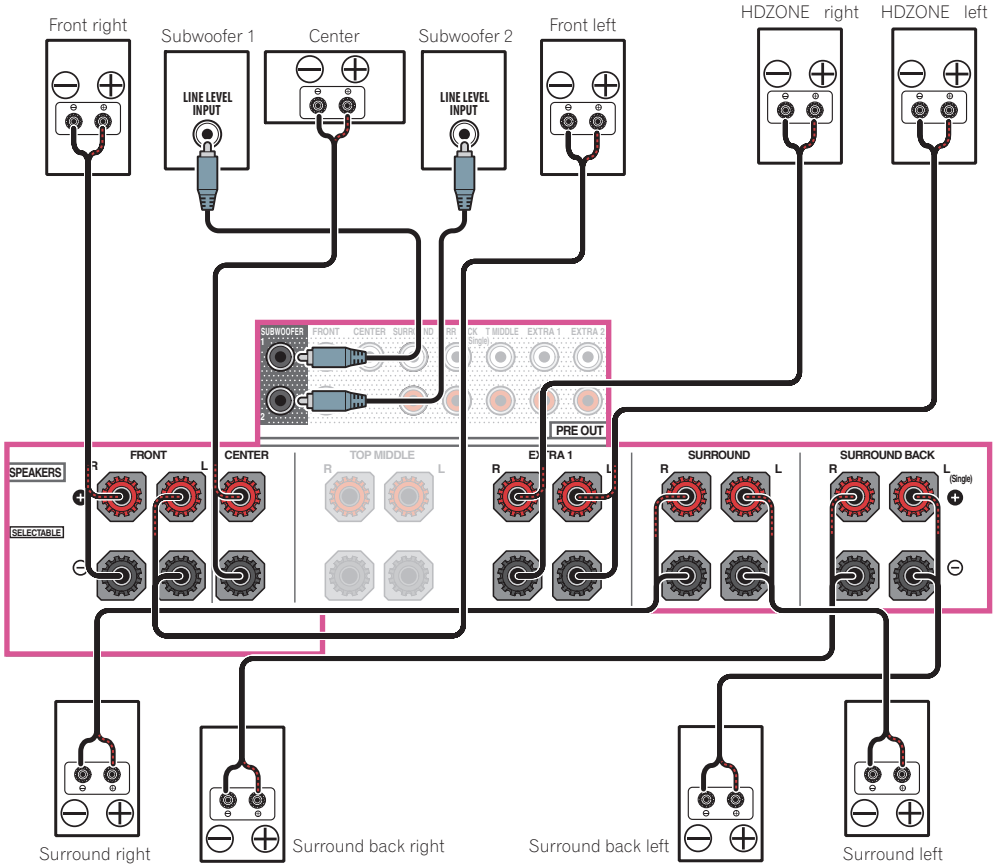

[I] 5.2 channel surround system & Front Bi-amping connection (High quality surround) & HDZONE connection (Multi Zone)

- Select '**5.2 Bi-Amp+HDZONE**' from the **Speaker System** menu.
  See Speaker system setting on page 113 to do this.

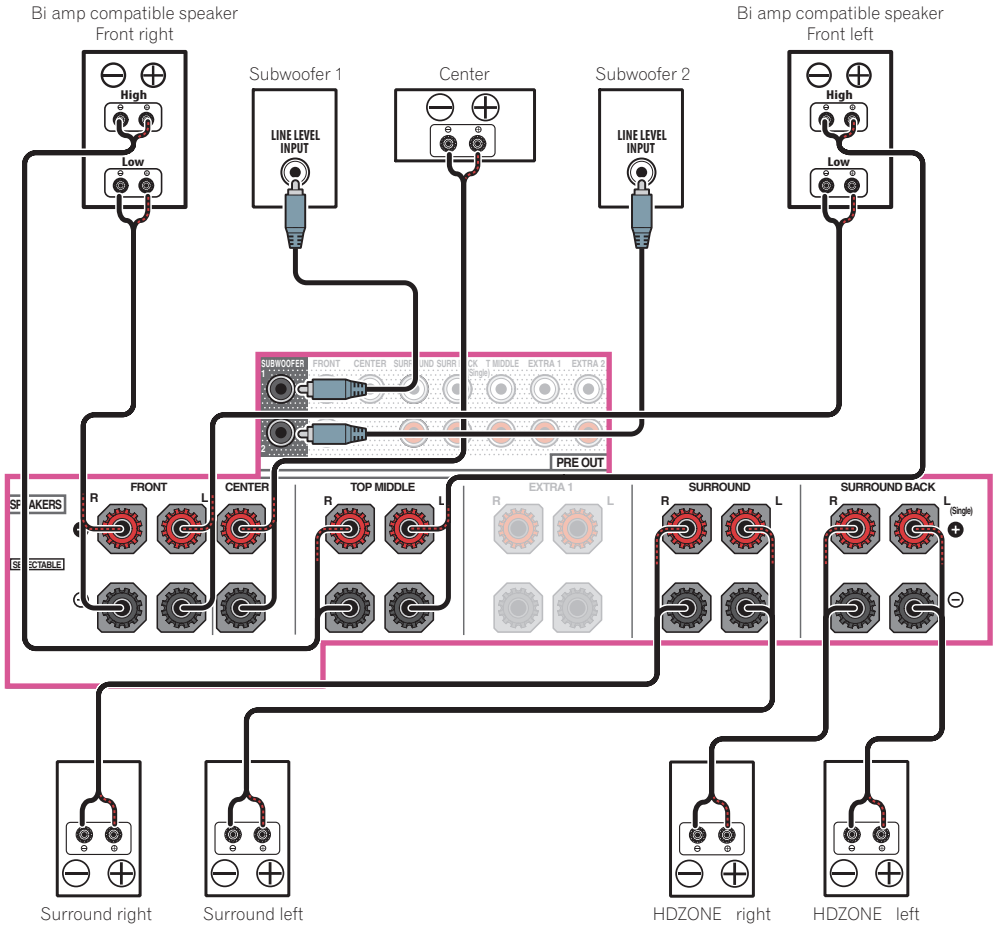

[J] 5.2 channel surround system & Speaker B Bi-amping connection

- Select '**5.2ch + SP-B Bi-Amp**' from the **Speaker System** menu.
  See Speaker system setting on page 113 to do this.

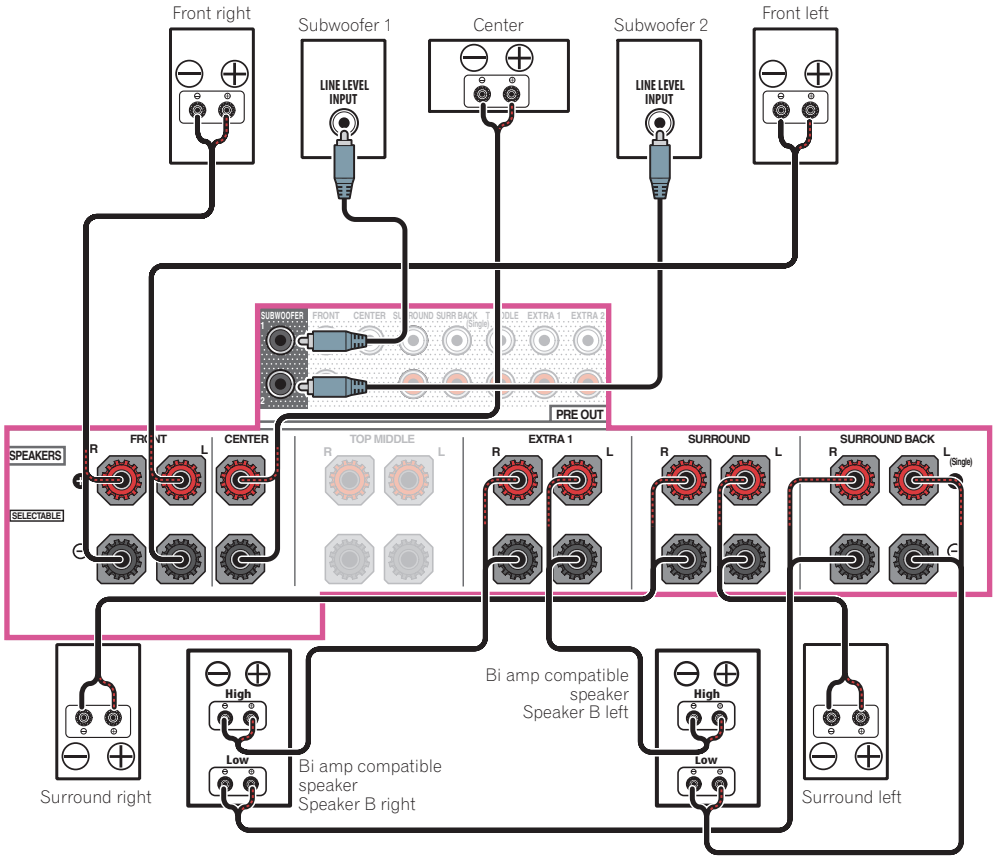

[K] 5.2 channel surround system & Front and Surround Bi-amping connection (High quality surround)

- Select '**5.2ch F+Surr Bi-Amp**' from the **Speaker System** menu.
  See Speaker system setting on page 113 to do this.

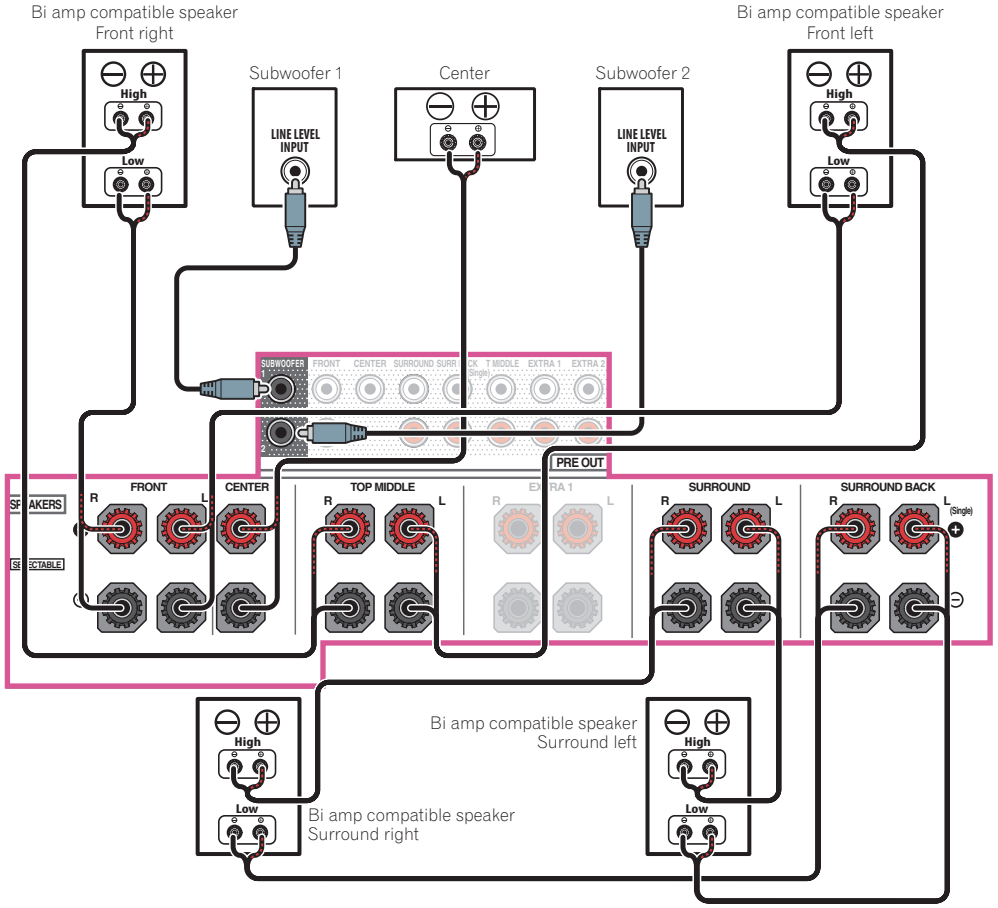

[L] 5.2 channel surround system & Front and Center Bi-amping connection (High quality surround)

- Select '**5.2ch F+C Bi-Amp**' from the **Speaker System** menu.
  See Speaker system setting on page 113 to do this.

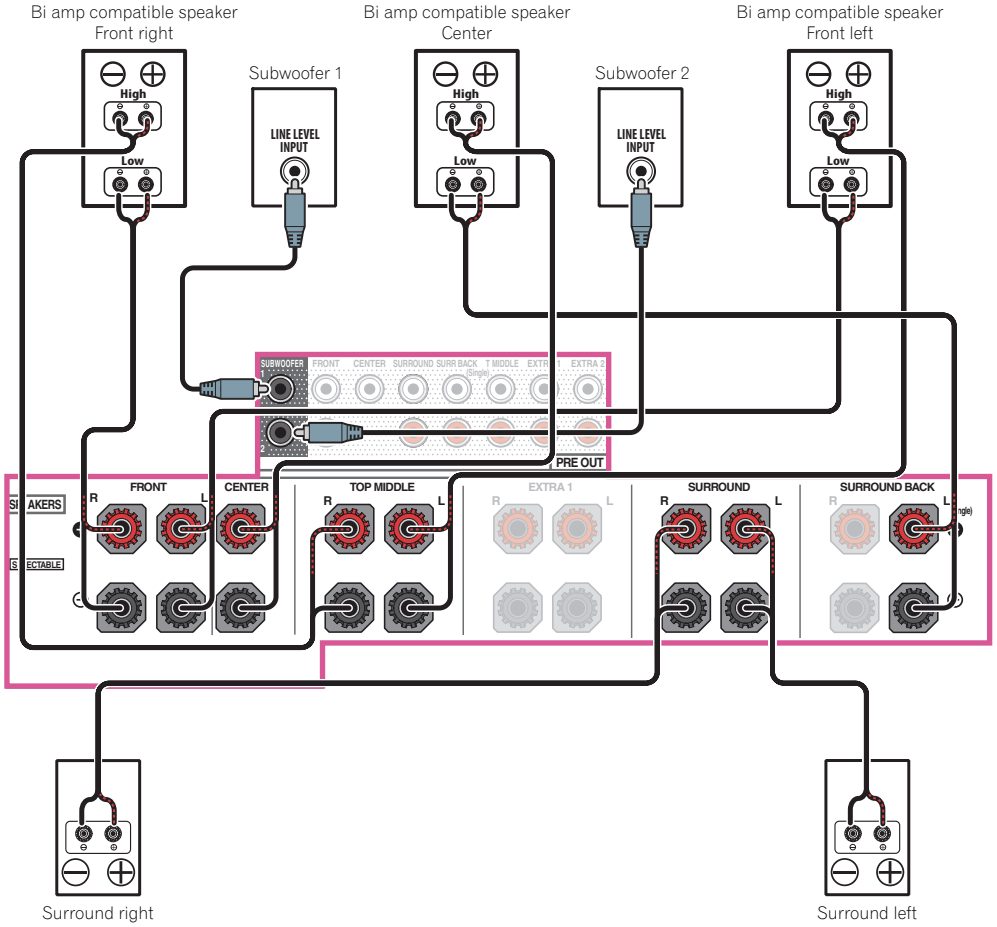

[M] 5.2 channel surround system & Center and Surround Bi-amping connection (High quality surround)

- Select '**5.2ch C+Surr Bi-Amp**' from the **Speaker System** menu.
  See Speaker system setting on page 113 to do this.

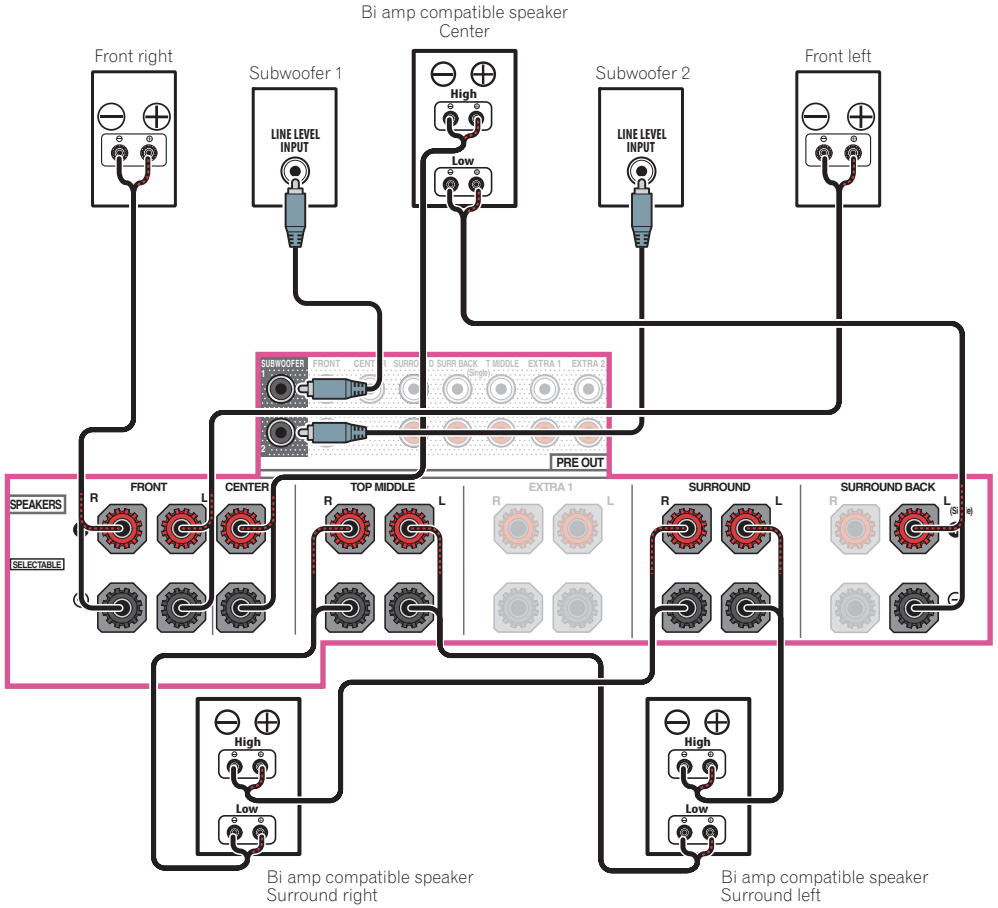

[N-1] Multi-ZONE Music connection
[N-2] 5.2 channel surround system & ZONE 2/HDZONE connection (Multi Zone)
[N-3] 5.2 channel surround system & ZONE 2/ZONE 3 connection (Multi Zone)

See Speaker system setting on page 113 to do this.

- [N-1] **Speaker System** setting: **Multi-ZONE Music**
- [N-2] **Speaker System** setting: **5.2 +ZONE 2+HDZONE**
- [N-3] **Speaker System** setting: **5.2 +ZONE 2+ZONE 3**

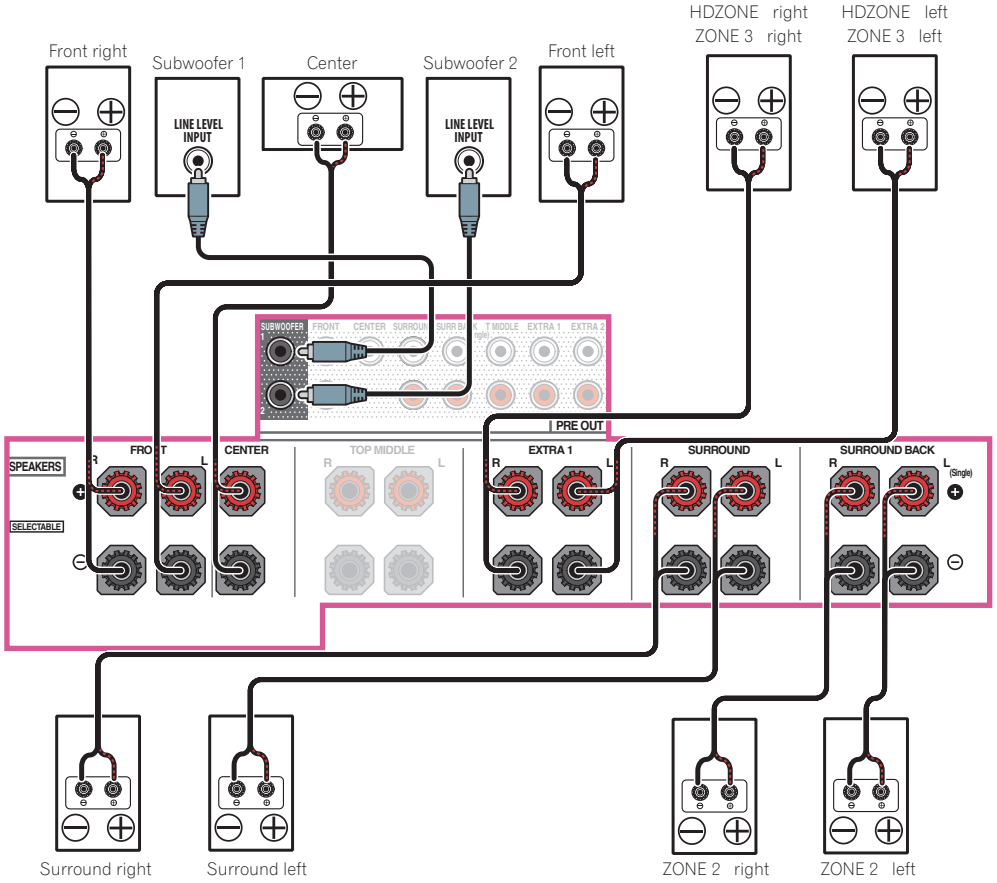

About the audio connection

Sound signal priority	Types of cables and terminals	Transferable audio signals
↑	HDMI	HD audio
	Digital (Coaxial) Digital (Optical)	Conventional digital audio
	RCA (Analog) (*White/Red*)	Conventional analog audio

- With an HDMI cable, video and audio signals can be transferred in high quality over a single cable.
- For HD audio, see About HDMI on page 37.

About the video converter

The video converter ensures that all video sources are output through the **HDMI OUT 1** and **HDMI OUT 2** terminals.
If the TV is only connected to the receiver's composite **VIDEO MONITOR OUT** jacks, all the other video devices must be connected through composite connections.
If several video components are assigned to the same input function (see The Input Setup menu on page 61), the converter gives priority to HDMI, component, then composite (in that order).

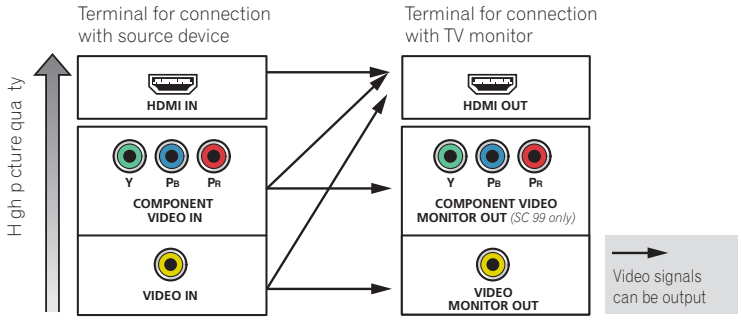

Notes

- With factory default settings, video from the video cable or component cable will not be output from the HDMI terminal. To output video, you must switch video input to the device connected with the video cable or component cable and set **V.CONV** to **ON** (page 91).
- The only exception is HDMI: since this resolution cannot be downsampled, you must connect your monitor/TV to the receiver's HDMI output when connecting this video source.
- If the video signal does not appear on your TV, try adjusting the resolution settings on your component or display. Note that some components (such as video game units) have resolutions that may not be converted. In this case, try switching Digital Video Conversion (in Setting the Video options on page 91) **OFF**.
- The signal input resolutions that can be converted from the component video input for the HDMI output are 480i/576i, 480p/576p, 720p and 1080i. 1080p signals cannot be converted.

This item incorporates copy protection technology that is protected by U.S. patents and other intellectual property rights of Rovi Corporation. Reverse engineering and disassembly are prohibited.

About HDMI

The HDMI connection transfers uncompressed digital video, as well as almost every kind of digital audio.
This receiver incorporates High-Definition Multimedia Interface (HDMI®/™) technology.
This receiver supports the functions described below through HDMI connections.

- Digital transfer of uncompressed video (contents protected by HDCP (1080p/24, 1080p/60, etc.))
- HDCP 2.2 compatible terminal: **BD**, **DVD** (**HDMI IN 1**), **SAT/CBL** (**HDMI IN 2**), **HDMI OUT 1**, **HDMI OUT 2**, **HDMI OUT 3**
- 3D signal transfer
- Deep Color signal transfer
- x.v.Color signal transfer
- ARC (Audio Return Channel)
- 4K signal transfer
  —This may not operate properly, depending on the connected equipment.
  —4K 24p, 4K 25p, 4K 30p, 4K 50p and 4K 60p signals are supported.
- Input of multi-channel linear PCM digital audio signals (192 kHz or less) for up to 8 channels
- Input of the following digital audio formats:
  —Dolby Digital, Dolby Digital Plus, DTS, High bitrate audio (Dolby TrueHD, DTS-HD Master Audio, DTS-HD High Resolution Audio), CD, SACD (DSD signal), OBJECT based audio (Atmos)
- Synchronized operation with components using the **Control** with HDMI function (see Control with HDMI function on page 84)

Notes

- An HDMI connection can only be made with DVI-equipped components compatible with both DVI and High Bandwidth Digital Content Protection (HDCP). If you choose to connect to a DVI connector, you will need a separate adaptor (DVI→HDMI) to do so. A DVI connection, however, does not support audio signals. Consult your local audio dealer for more information.
- If you connect a component that is not compatible with HDCP, an **HDCP ERROR** message is displayed on the front panel display. Some components that are compatible with HDCP still cause this message to be displayed, but so long as there is no problem with displaying video this is not a malfunction.
- Depending on the component you have connected, using a DVI connection may result in unreliable signal transfers.
- This receiver supports SACD, Dolby Digital Plus, Dolby TrueHD and DTS-HD Master Audio. To take advantage of these formats, however, make sure that the component connected to this receiver also supports the corresponding format.
- Use a High Speed HDMI®/™ Cable. If an HDMI cable other than a High Speed HDMI®/™ Cable is used, it may not work properly.
- When an HDMI cable with a built-in equalizer is connected, it may not operate properly.
- Signal transfer is only possible when connected to a compatible component.
- HDMI format digital audio transmissions require a longer time to be recognized. Due to this, interruption in the audio may occur when switching between audio formats or beginning playback.
- Turning on/off the device connected to this unit's **HDMI OUT** terminal during playback, or disconnecting/connecting the HDMI cable during playback, may cause noise or interrupted audio.

The terms HDMI and HDMI High-Definition Multimedia Interface, and the HDMI Logo are trademarks or registered trademarks of HDMI Licensing, LLC in the United States and other countries.

"x.v.Color" and **x.v.Color** *are trademarks of Sony Corporation.*

Connecting your TV and playback components

Connecting using HDMI

If you have an HDMI or DVI (with HDCP) equipped component (Blu-ray Disc player (BD), etc.), you can connect it to this receiver using a commercially available HDMI cable.
If the TV and playback components support the **Control** with HDMI feature, the convenient **Control** with HDMI functions can be used (see Control with HDMI function on page 84).

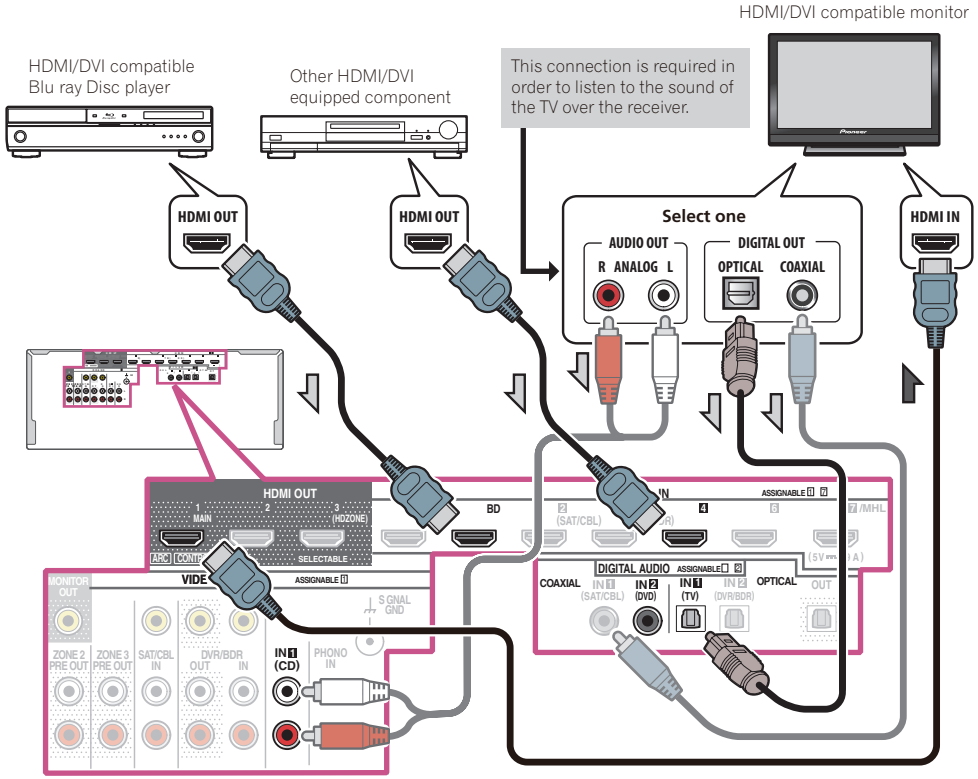

- When connecting to an HDMI/DVI-compatible monitor using the **HDMI OUT 2** terminal, switch the HDMI output setting to **OUT 2** or **OUT 1+2**. See Switching the HDMI output on page 94.
  In the same way, when an HDMI/DVI-compatible monitor is connected to the **HDMI OUT 3** terminal, switch the **HDMI OUT 3** setting to **ON** (page 94). In this case, **MAIN/HDZONE** at **ZONE Setup** must be set to **MAIN** (page 117).
- For input components, connections other than HDMI connections are also possible (see Connecting your DVD player with no HDMI output on page 39).
- If you want to listen to the sound of the TV over the receiver, connect the receiver and TV with audio cables.
  — When the TV and receiver are connected by HDMI connections, if the TV supports the HDMI ARC (Audio Return Channel) function, the sound of the TV can be input to the receiver via the **HDMI OUT** terminal, so there is no need to connect an audio cable. In this case, set **ARC** at **HDMI Setup** to **ON** (see HDMI Setup on page 85).
  After setting the **ARC**, some time may be required for the connected device to be recognized and the sound to be produced.
  — If you use a coaxial digital audio cable or RCA (analog) audio cable, you'll need to tell the receiver which digital or analog audio input you connected the TV to (see The Input Setup menu on page 61).
  — Please refer to the TV's operation manual for directions on connections and setup for the TV.
- If the TV to be connected using HDMI supports 4K/60p, you can switch the 4K/60p signal input setting in accordance with TV performance. When the **4K/60p** setting is changed to **4:4:4**, the video image may not be output normally unless the HDMI cable supports 4K/60p 4:4:4 24 bit (18 Gbps transmission). In such a case, select **4:2:0** (page 94).
- You cannot input 4K/60p 4:4:4 24 bit video from **HDMI IN 3** to the **IN 6** terminal. Use the **BD IN**, **HDMI IN 1** or **HDMI IN 2** terminal.
- The **HDMI OUT 3** terminal outputs 4K/60p 4:4:4 24 bit video when **MAIN/HDZONE** is set to **MAIN**. When it is set to **HDZONE**, the 4K/60p 4:4:4 24 bit video is not output.

Connecting your DVD player with no HDMI output

This diagram shows connections of a TV (with HDMI input) and DVD player (or other playback component with no HDMI output) to the receiver.

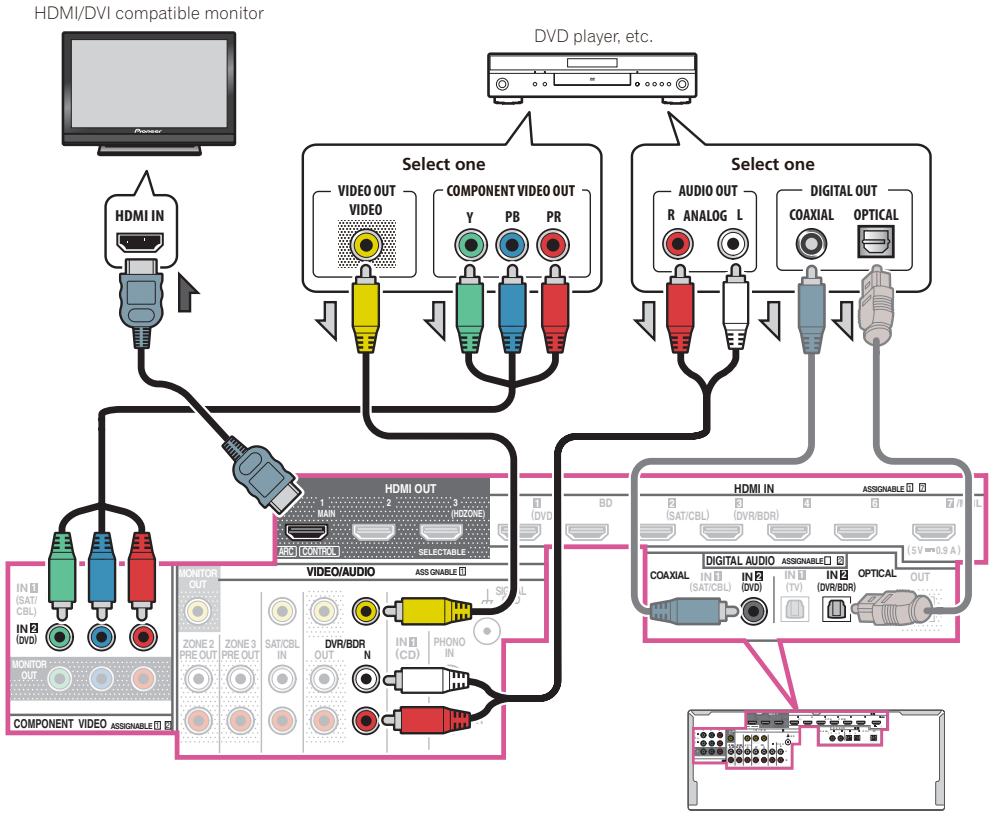

- With factory default settings, video from the video cable or component cable will not be output from the HDMI terminal. To output video, you must switch video input to the device connected with the video cable or component cable and set **V.CONV** to **ON** (page 91).
- If you want to listen to the sound of the TV over the receiver, connect the receiver and TV with audio cables (page 38).
  —When the TV and receiver are connected by HDMI connections, if the TV supports the HDMI ARC (Audio Return Channel) function, the sound of the TV can be input to the receiver via the **HDMI OUT 1** terminal, so there is no need to connect an audio cable. In this case, set **ARC** at **HDMI Setup** to **ON** (see HDMI Setup on page 85).
- When connecting to a DVD player with an optical digital audio cable or a coaxial digital audio cable, performing input terminal settings are necessary (page 61).
- If HDZONE is set to on, video images connected using a video cable or component cable are not output from the HDMI terminal. To output video images, turn HDZONE off (page 95).

Connecting your TV with no HDMI input

This diagram shows connections of a TV (with no HDMI input) and DVD player (or other playback component) to the receiver.

Important

- With these connections, the picture is not output to the TV even if the DVD player is connected with an HDMI cable. Connect the receiver and TV using the same type of video cable as used to connect the receiver and player.
- Also, when the receiver and TV are connected by anything other than an HDMI cable, the OSD function allowing display of the receiver's settings, operations, etc., on the TV's screen cannot be used. In this case, watch the receiver's front panel display while performing the various operations and making settings.

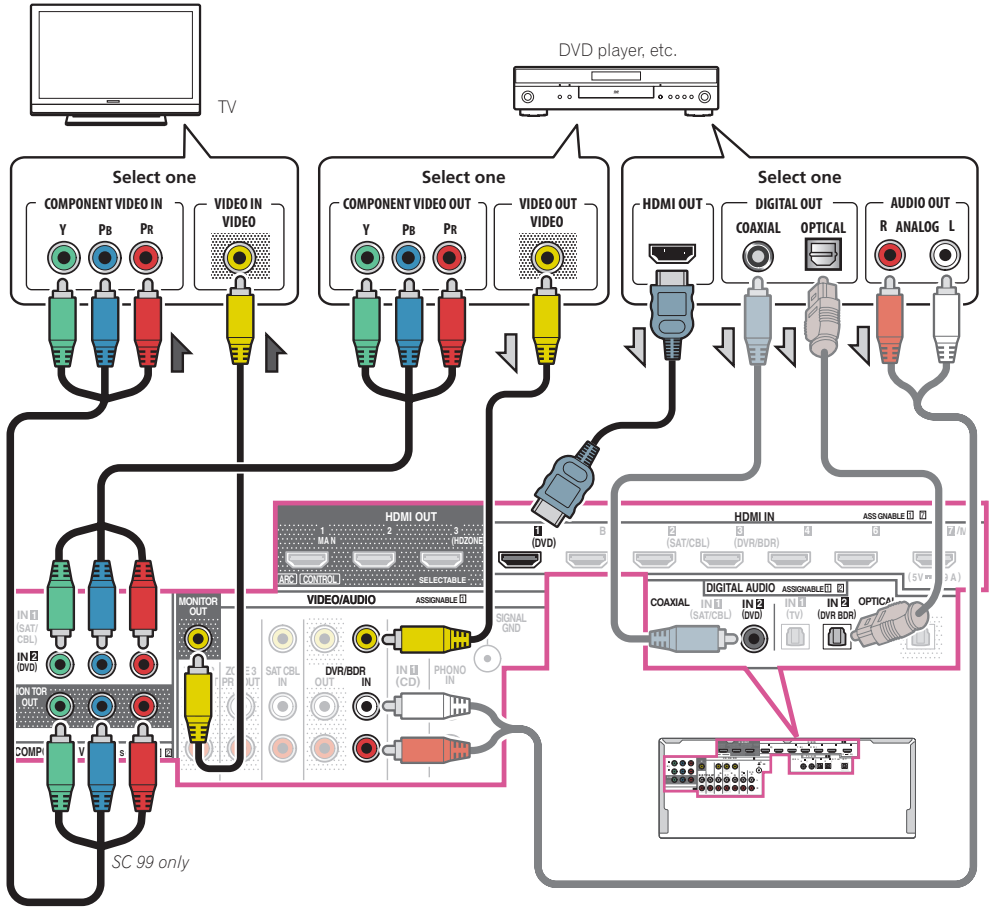

- In order to listening to HD audio with this receiver, connect an HDMI cable, and use analog video cable for video signal input.
  Depending on the player, it may not be possible to output video signals to both HDMI and other video output (composite, etc.) simultaneously, and it may be necessary to make video output settings. Please refer to the operating instructions supplied with your player for more information.
- If you want to listen to the sound of the TV over the receiver, connect the receiver and TV with audio cables (page 38).
- When connecting to a DVD player with an optical digital audio cable or a coaxial digital audio cable, performing input terminal settings are necessary (page 61).

Connecting an HDD/DVD recorder, BD recorder and other video sources

This receiver has audio/video inputs suitable for connecting analog or digital video devices, including HDD/DVD recorders and BD recorders.
When you set up the receiver you'll need to tell the receiver which input you connected the recorder to (see also The Input Setup menu on page 61).

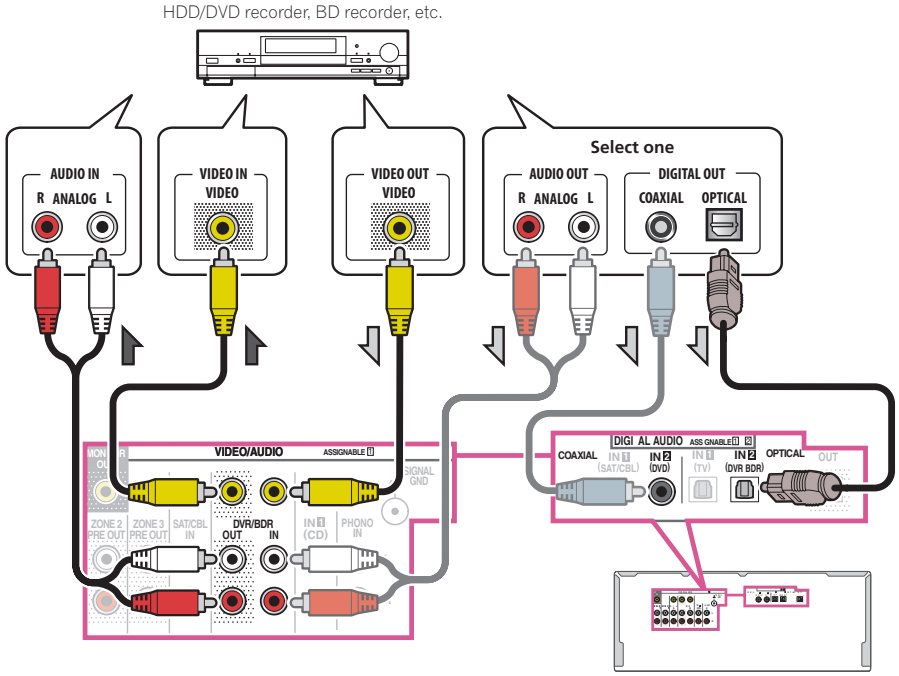

- In order to record, you must connect the analog audio cables (the digital connection is for playback only) (page 96).

- If your HDD/DVD recorder, BD recorder, etc., is equipped with an HDMI output terminal, we recommend connecting it to the receiver's **HDMI DVR/BDR IN** terminal. When doing so, also connect the receiver and TV by HDMI (see Connecting using HDMI on page 38).

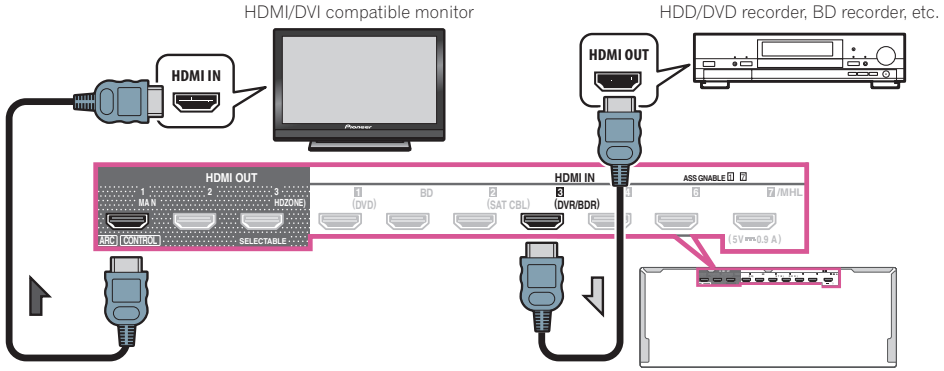

Connecting a satellite/cable receiver or other set-top box

Satellite and cable receivers, and terrestrial digital TV tuners are all examples of so-called 'set-top boxes'. When you set up the receiver you'll need to tell the receiver which input you connected the set-top box to (see The Input Setup menu on page 61).

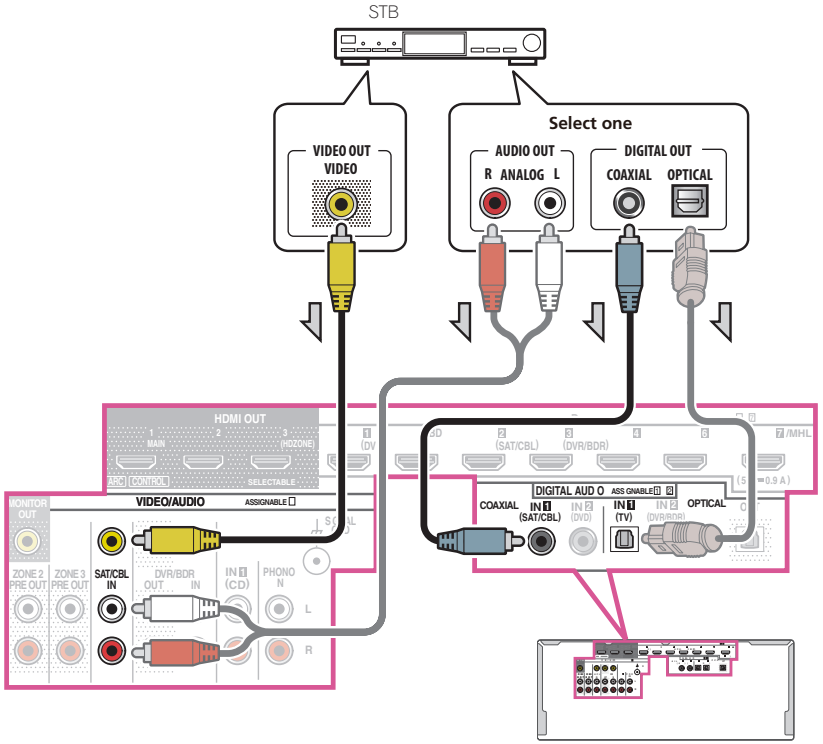

- With factory default settings, video from the video cable or component cable will not be output from the HDMI terminal. To output video, you must switch video input to the device connected with the video cable or component cable and set **V.CONV** to **ON** (page 91).
- If HDZONE is set to on, video images connected using a video cable or component cable are not output from the HDMI terminal. To output video images, turn HDZONE off (page 95).
- If you use an optical digital audio cable or RCA (analog) audio cable, you'll need to tell the receiver which digital input you connected the set-top box to (see The Input Setup menu on page 61).

- If your set-top box is equipped with an HDMI output terminal, we recommend connecting it to the receiver's **HDMI SAT/CBL IN** terminal. When doing so, also connect the receiver and TV by HDMI (see Connecting using HDMI on page 38).

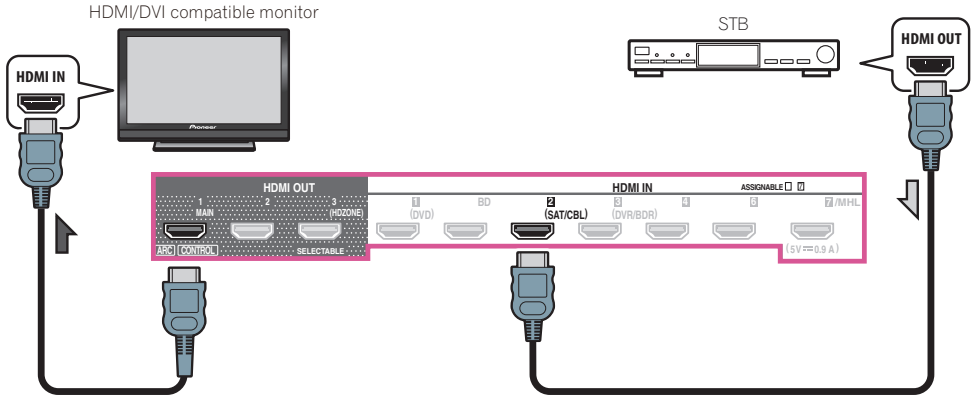

- Even if your set-top box is equipped with an HDMI output terminal, in some cases the sound is output from the digital audio output (optical or coaxial) and only the video is output from the HDMI output terminal. In this case, make the HDMI and digital audio connections as shown below.

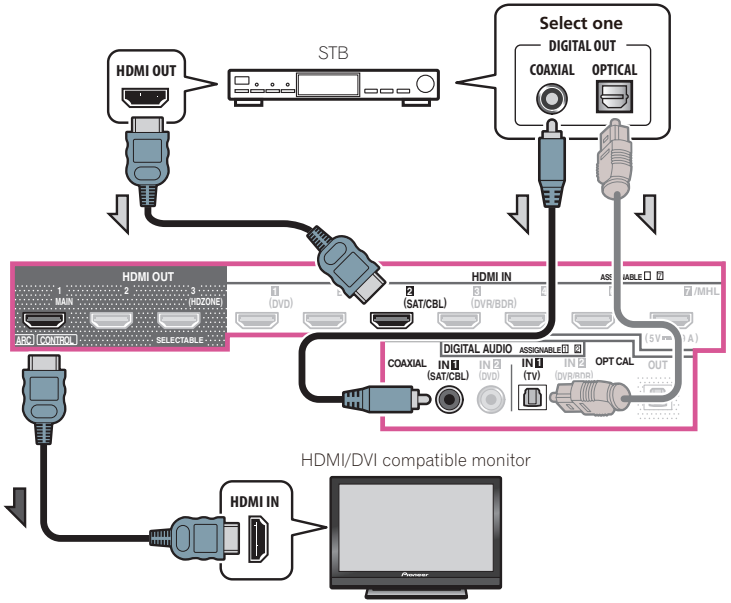

—If you use an optical digital audio cable or RCA (analog) audio cable, you'll need to tell the receiver which digital input you connected the set-top box to (see The Input Setup menu on page 61).

Connecting other audio components

This receiver has both digital and analog inputs, allowing you to connect audio components for playback. When you set up the receiver you'll need to tell the receiver which input you connected the component to (see also The Input Setup menu on page 61).

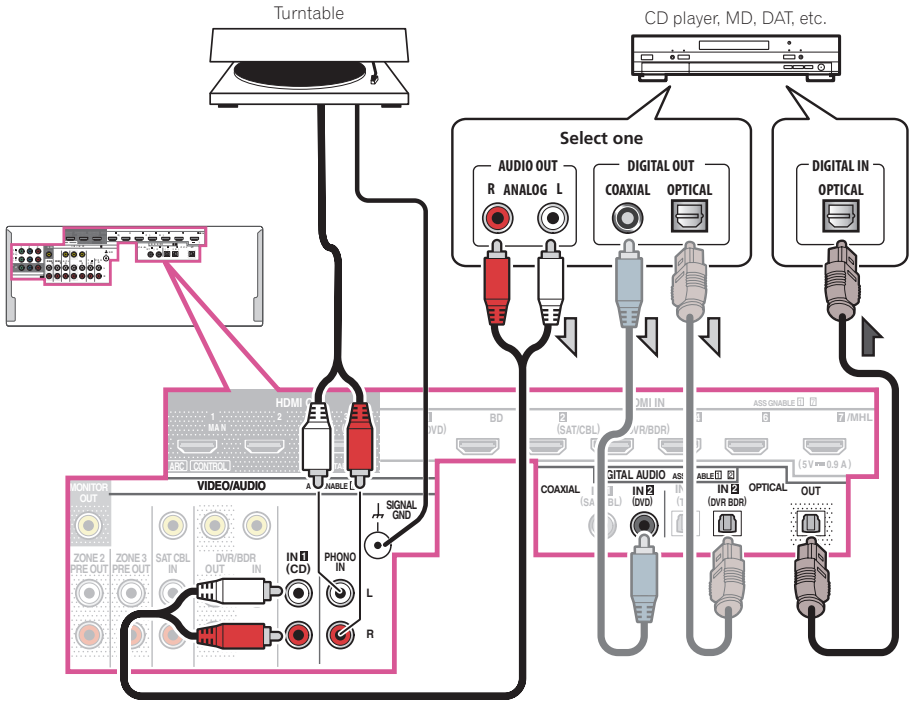

- If your turntable has line-level outputs (i.e., it has a built-in phono pre-amp), connect it to the **ANALOG IN 1 (CD)** inputs instead.
- You can't hear HDMI audio through this receiver's digital out jack.

Connecting additional amplifiers

This receiver has more than enough power for any home use, but it's possible to add additional amplifiers to every channel of your system using the pre-outs. Make the connections shown below to add amplifiers to power your speakers.

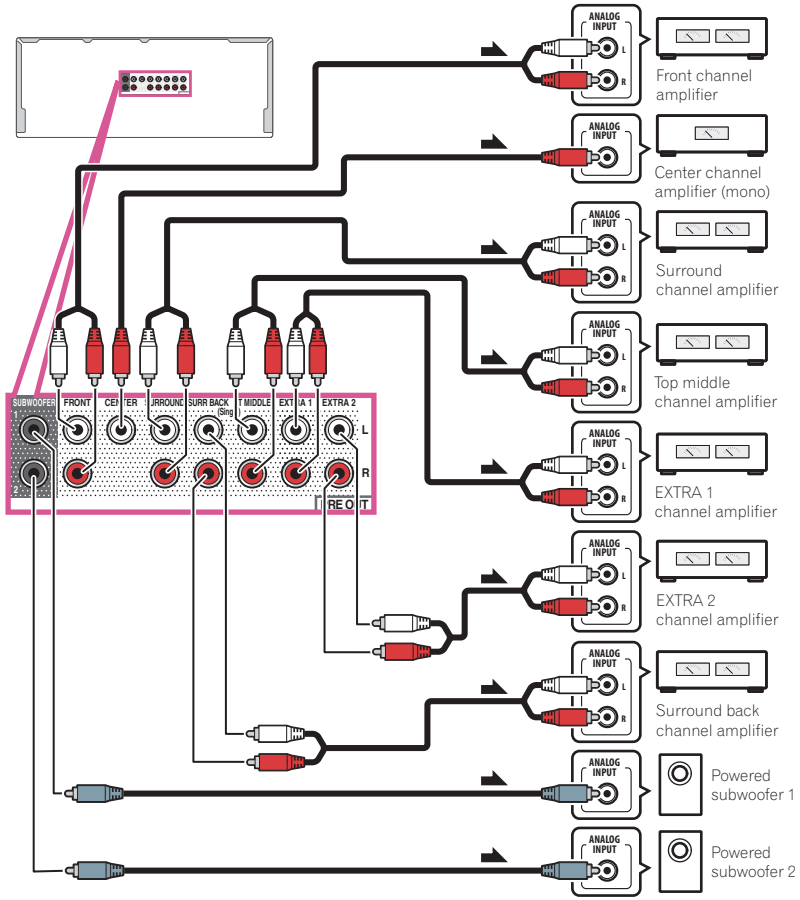

- The sound output from each pre out terminal is the same as the sound output from the speaker terminals of the same name. The channel used for sound output will depend on the **Speaker System** settings (see Installing your speaker system on page 27).
- If you're not using a subwoofer, change the front speaker setting (see Speaker Setting on page 110) to **LARGE**.
- You can use the additional amplifier on the surround back channel pre-outs for a single speaker as well. In this case plug the amplifier into the left (**SURROUND BACK L (Single)**) terminal only.
- The sound from the surround back terminals will depend on how you have configured the Speaker system setting on page 113.

- If you have two subwoofers, the second subwoofer can be connected to the **SUBWOOFER 2** terminal. Connecting two subwoofers increases the bass sound to achieve more powerful sound reproduction.
- To hear sound only from the pre-outs, switch the speaker terminals to **SP: OFF** (page 93) or simply disconnect any speakers that are connected directly to the receiver.
  It is also possible to hear sound only from the pre-outs by switching the **AMP** setting to **OFF** and setting the pre-amp mode to turn the power amplifiers for all channels off (see Setting the Audio options on page 89).
- The **EXTRA 1** and **EXTRA 2** terminal signals differ depending on the **Speaker System** settings. Refer to page 27 and page 113 for details.

Connecting the multichannel analog inputs

SC-99 only

For your Blu-ray Disc player and DVD player may have 5.1, 6.1 or 7.1 channel analog outputs (depending on whether your player supports surround back channels). Make sure that the player is set to output multichannel analog audio.

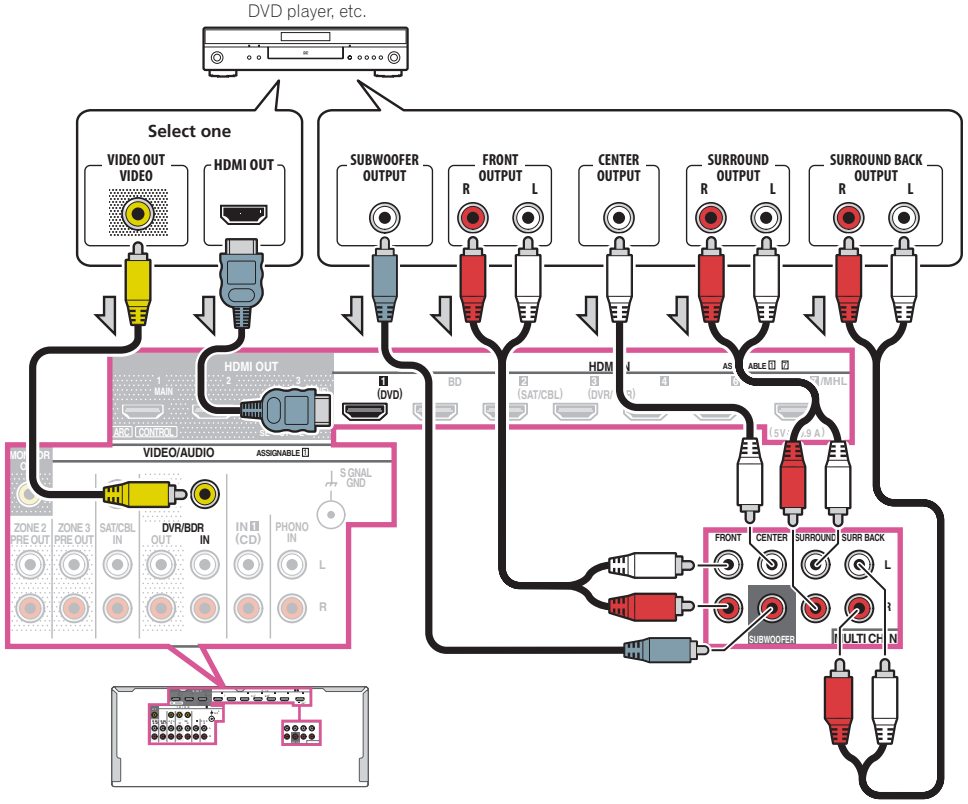

- For instructions on playing the multichannel analog inputs, see Selecting the multichannel analog inputs on page 64.
- If there is a single surround back output, connect it to the **SURR BACK L** jack on this receiver.
- To use a 5.1-channel speaker set, use the surround speakers for the surround channel, not the surround back channel.
- The sound from the surround back terminals will depend on how you have configured the Speaker system setting on page 113.
- The audio signal input to **MULTI CH IN** cannot be downmixed.
- To input video signals using an HDMI cable, **MULTI CH IN** must be selected at **Input** under **Input Setup** and the connected HDMI terminal must be assigned to **HDMI Input**. For details, see The Input Setup menu on page 61.
- To input video signals using a composite video cable, **Multi Ch In Setup** must be selected at **Other Setup** and the connected video input terminal must be assigned to **Video Input**. For details, see Multi Channel Input Setup on page 118.

Connecting AM/FM antennas

Connect the AM loop antenna and the FM wire antenna as shown below. To improve reception and sound quality, connect external antennas (see Connecting external antennas on page 44).

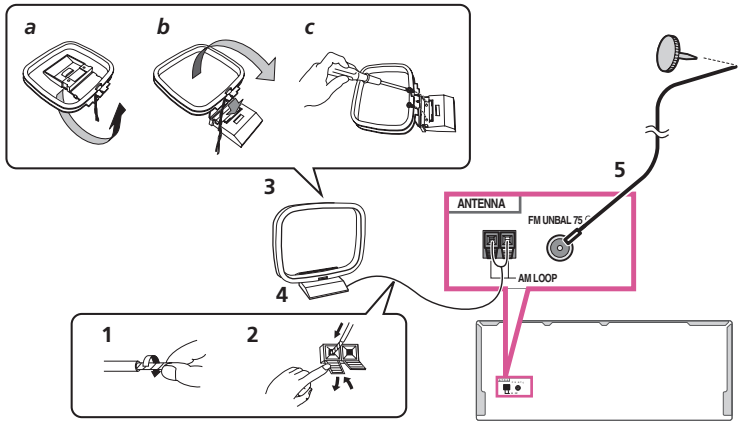

1 Pull off the protective shields of both AM antenna wires.

2 Push open the tabs, then insert one wire fully into each terminal, then release the tabs to secure the AM antenna wires.

3 Fix the AM loop antenna to the attached stand.

To fix the stand to the antenna, bend in the direction indicated by the arrow (*fig. a*) then clip the loop onto the stand (*fig. b*).

- If you plan to mount the AM antenna to a wall or other surface, secure the stand with screws (*fig. c*) before clipping the loop to the stand. Make sure the reception is clear.

4 Place the AM antenna on a flat surface and in a direction giving the best reception.

5 Connect the FM wire antenna into the FM antenna socket.

For best results, extend the FM antenna fully and fix to a wall or door frame. Don't drape loosely or leave coiled up.

Connecting external antennas

To improve FM reception, connect an external FM antenna to **FM UNBAL 75 Ω**.

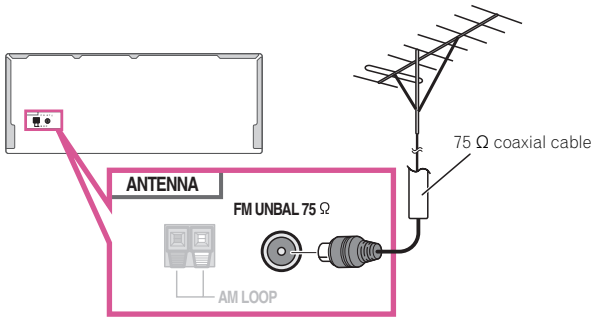

To improve AM reception, connect a 5 m to 6 m (16 ft. to 20 ft.) length of vinyl-coated wire to the **AM LOOP** terminals without disconnecting the supplied AM loop antenna.
For the best possible reception, suspend horizontally outdoors.

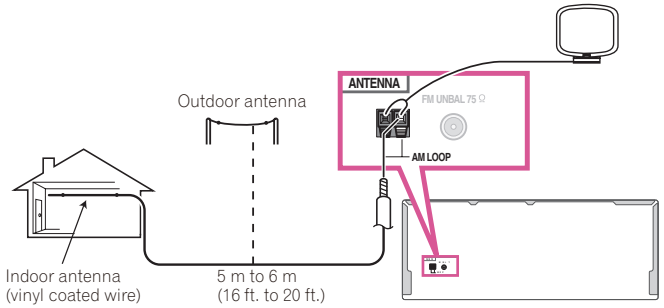

Making MULTI-ZONE connections

Equipment connected to this receiver in a different room (sub zone) from a room with this receiver (main zone) can be played by operating this receiver (multi-zone function). Not only can the same source be played simultaneously in the main and sub zones, different sources can also be played.
By preparing a different amplifier with a HDMI input terminal in the sub zone, the other amplifier and TV monitor can be connected to this receiver. When there is no other amplifier, the speaker terminal of this receiver can be used. High resolution via HDMI can be enjoyed in the sub zone (**HDZONE** function).

Important

- The settings must be changed at **ZONE Setup** in order to use the multi-zone function (page 117).
- **MAIN/HDZONE** at **ZONE Setup** must be set to **HDZONE** in order to use the **HDZONE** function (page 117).

MULTI-ZONE listening options

The following table shows the signals that can be output to **ZONE 2** and **HDZONE**:

Sub Zone	Input functions available
ZONE 2 <a>	**SAT/CBL**, **DVR/BDR**, **INTERNET RADIO**, **PANDORA**, **Spotify**, **MEDIA SERVER**, **FAVORITES**, **iPod/USB**, **USB-DAC** (SC-99 only), **TV**, **CD**, **TUNER**, **BT AUDIO** (Outputs analog audio)
ZONE 3 <a>	**SAT/CBL**, **DVR/BDR**, **INTERNET RADIO**, **PANDORA**, **Spotify**, **MEDIA SERVER**, **FAVORITES**, **iPod/USB**, **USB-DAC** (SC-99 only), **TV**, **CD**, **TUNER**, **BT AUDIO** (Outputs analog audio)
HDZONE (HDMI) <b>	**BD**, **DVD**, **SAT/CBL**, **DVR/BDR**, **INTERNET RADIO**, **PANDORA**, **Spotify**, **MEDIA SERVER**, **FAVORITES**, **iPod/USB**, **USB-DAC** (SC-99 only), **HDMI 1**, **HDMI 2**, **HDMI 3**, **HDMI 4**, **HDMI 5**, **HDMI 6**, **HDMI 7/MHL**, **BT AUDIO** (Outputs HDMI audio and video signals)

a • It is not possible to down-convert the audio input signal from the **HDMI** input terminals or digital input terminals (**OPTICAL** and **COAXIAL**) and output them to ZONE 2.
• It is not possible to down-convert the audio input signal from the **HDMI** input terminals or digital input terminals (**OPTICAL** and **COAXIAL**) and output them to ZONE 3.

b • The inputs that can be switched differ according to how terminals **HDMI IN 1** to **IN 7** are assigned. Upon shipment from the factory, the input terminals are assigned to **DVD**, **SAT/CBL**, **DVR/BDR**, **HDMI 4**, **HDMI 5**, **HDMI 6** and **HDMI 7/MHL**, in order starting from terminal **HDMI IN 1**.
• The video/audio signals of the RCA analog input terminals, the digital input terminals (**OPTICAL** and **COAXIAL**) and the **COMPONENT VIDEO** input terminals cannot be up-converted and output to the **HDZONE**.
• When any of the **HDMI 3** to **HDMI 7/MHL** inputs is selected in the main zone, it is only possible to select the same input as in the main zone for the **HDZONE**. (Inputs other than the ones listed here can be selected.)
The same limitations apply when one of the above inputs is selected for the **HDZONE**.
• *SC-99 only:* If you wish to select **USB-DAC** for **HDZONE**, set **Speaker System** to **7.2ch + HDZONE**, **5.2 Bi-Amp+HDZONE**, or **5.2 +ZONE 2+HDZONE** (page 113).

Notes

- When any of the **INTERNET RADIO**, **PANDORA**, **Spotify**, **MEDIA SERVER**, **FAVORITES**, **iPod/USB** or **BT AUDIO** inputs is selected in the main zone, it is only possible to select the same input as in the main zone for the sub zone. (Inputs other than the ones listed here can be selected.)
The same limitations apply when one of the above inputs is selected for the sub zone.
- *SC-99 only:* Any of **INTERNET RADIO**, **PANDORA**, **Spotify**, **MEDIA SERVER**, **FAVORITES**, **iPod/USB** or **BT AUDIO** and **USB-DAC** cannot be selected for each sub zone at the same time.
- *SC-99 only:* When AirPlay or DMR, and **USB-DAC** are input, you cannot select for each sub zone at the same time.

Basic MULTI-ZONE setup (ZONE 2)

- **Connect a separate amplifier to the AUDIO ZONE 2 OUT jacks on this receiver.**

You should have a pair of speakers attached to the sub zone amplifier as shown in the following illustration.

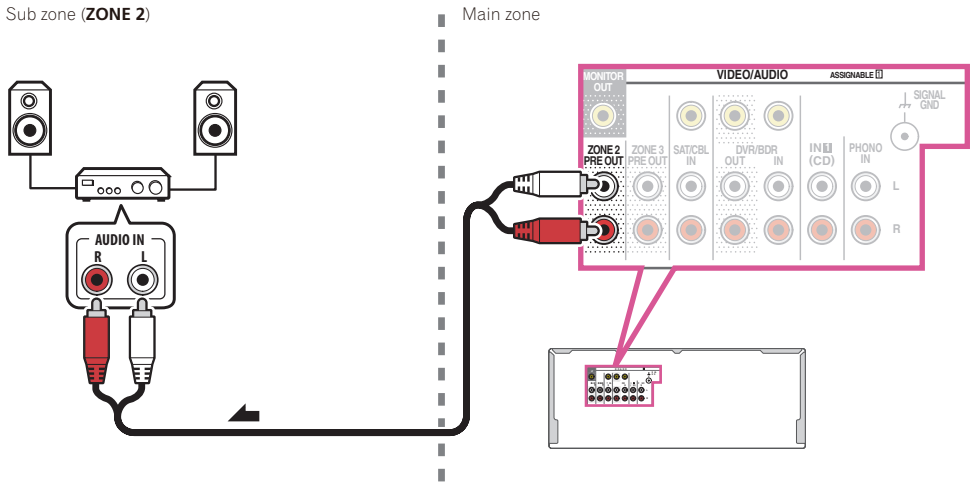

MULTI-ZONE setup using speaker terminals (ZONE 2)

- You must select **5.2 +ZONE 2+ZONE 3** or **5.2 +ZONE 2+HDZONE** in Speaker system setting (page 113) to use this setup.

- **Connect a pair of speakers to the surround back speaker terminals.**

You should have a pair of speakers attached to the surround back speaker terminals as shown below.

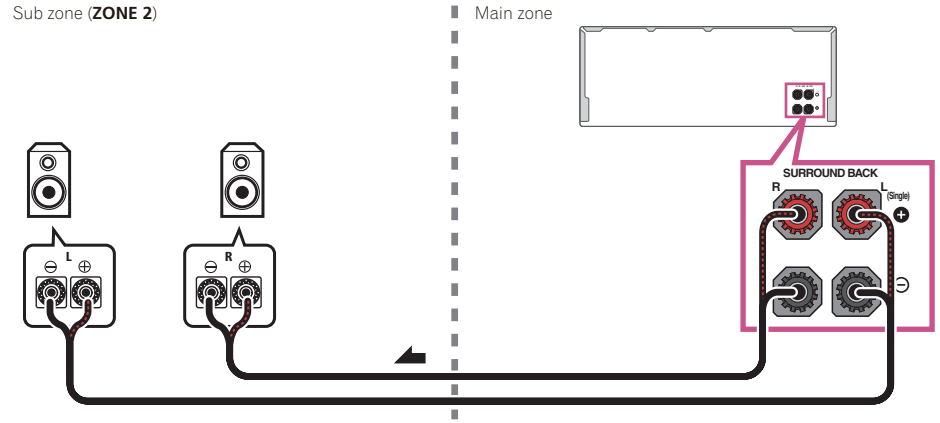

Secondary MULTI-ZONE setup (ZONE 3)

- **Connect a separate amplifier to the AUDIO ZONE 3 OUT jacks on this receiver.**

You should have a pair of speakers attached to the sub zone amplifier as shown in the following illustration.

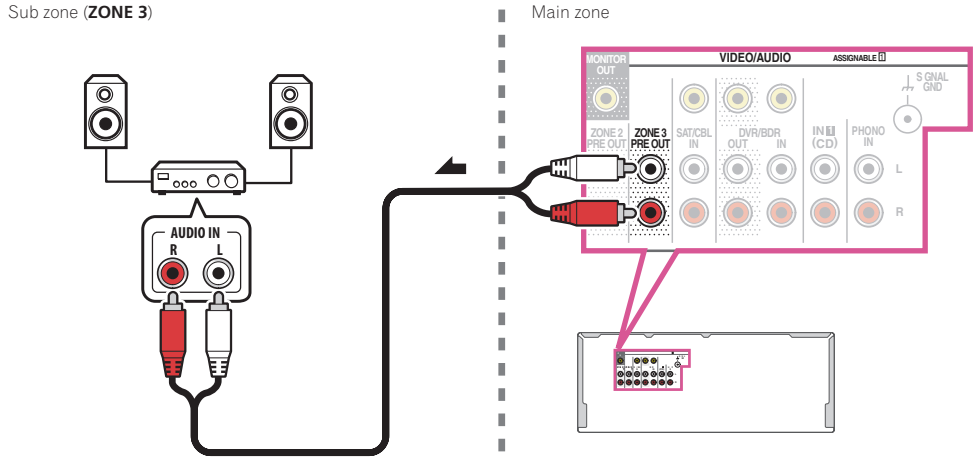

Secondary MULTI-ZONE setup using speaker terminals (ZONE 3)

You must select **5.2 +ZONE 2+ZONE 3** in Speaker system setting on page 113 to use this setup.

- **Connect the speakers to the EXTRA 1 terminals.**

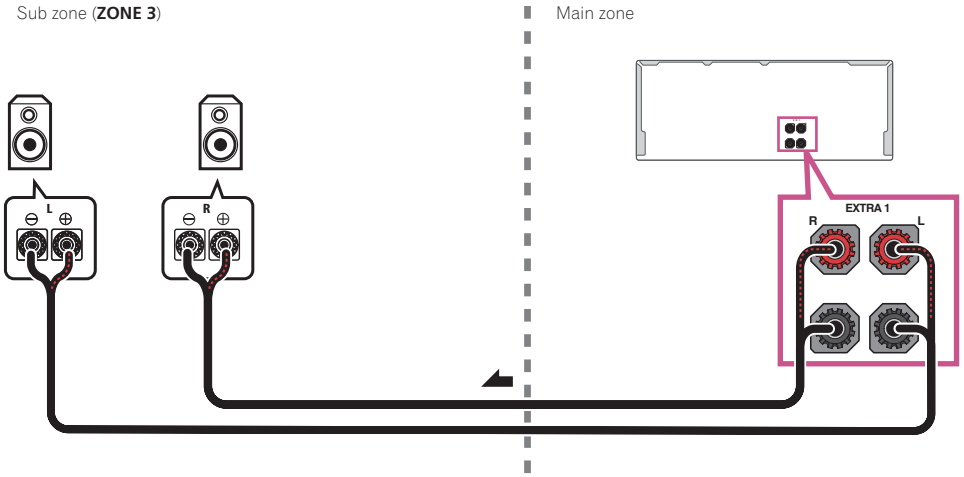

MULTI-ZONE setup using HDMI terminal (HDZONE)

Important

- **MAIN/HDZONE** at **ZONE Setup** must be set to **HDZONE** in order to use the **HDZONE** function (page 117).
- To use the **HDZONE** functions, set **Control** or **Control Mode** in **HDMI Setup** to **OFF**. For details, see HDMI Setup on page 85.

● **Connect a separate receiver to this receiver's HDMI OUT 3 terminal.**

Connect speakers and a TV to the **HDZONE** receiver as shown on the illustration below.

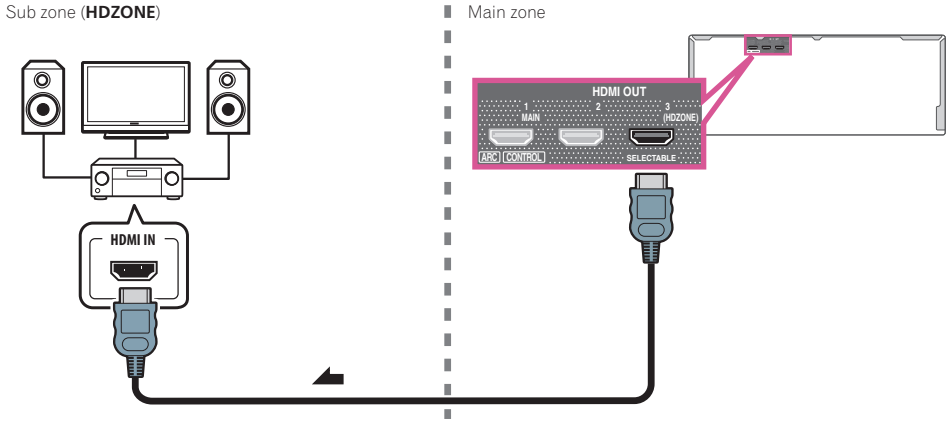

Multi-zone connection using the HDMI terminal and speaker terminals (HDZONE)

Important

- The settings must be changed at **ZONE Setup** in order to use the **HDZONE** function (page 117).
- To use the **HDZONE** functions, set **Control** or **Control Mode** in **HDMI Setup** to **OFF**. For details, see HDMI Setup on page 85.
- It is neccessary to set the **Speaker System** to **7.2ch + HDZONE**, **5.2 Bi-Amp+HDZONE**, or **5.2 +ZONE 2+HDZONE** (page 113).

1 Connect the speakers to the EXTRA 1 terminals, or the SURROUND BACK terminals.

Which speaker terminal is connected defers depending on the **Speaker System** (page 113) setting. For details, see Installing your speaker system on page 27.

The following diagram shows the connection with the **EXTRA 1** speaker terminals.

2 Connect a TV monitor to the HDMI OUT 3 (HDZONE) terminal on this receiver.

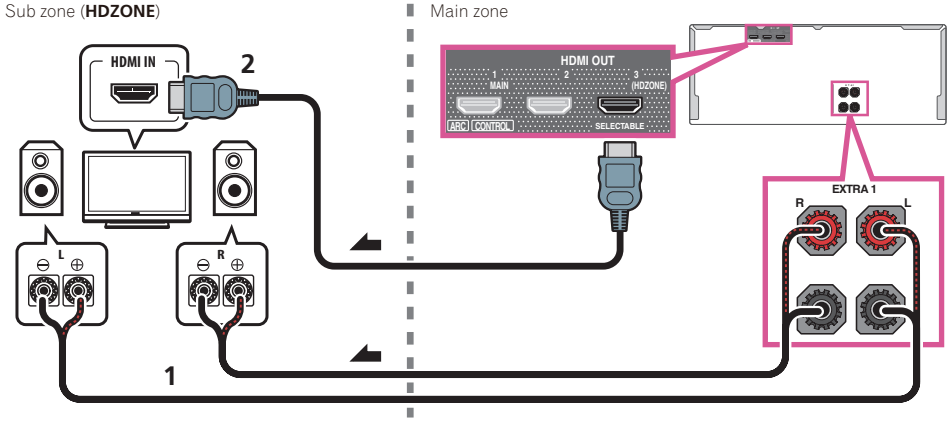

Connecting to the network through LAN interface

By connecting this receiver to the network via the LAN terminal, you can listen to Internet radio stations. To listen to Internet radio stations, you must sign a contract with an ISP (Internet Service Provider) beforehand.
When connected in this way, you can play audio files stored on the components on the local network, including your computer.

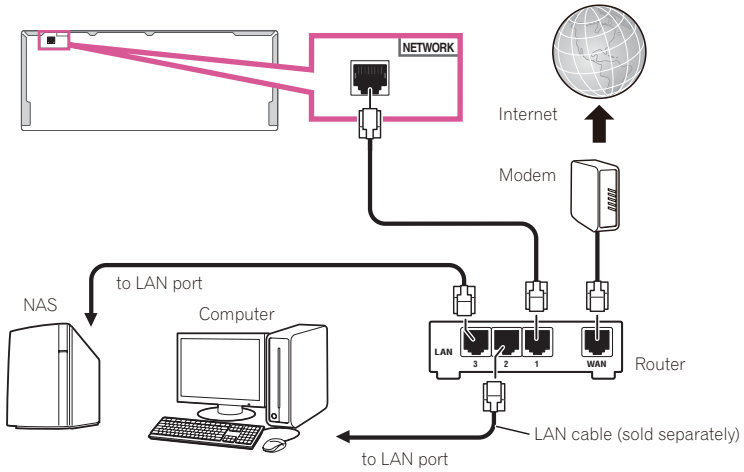

Connect the LAN terminal on this receiver to the LAN terminal on your router (with or without the built-in DHCP server function) with a straight LAN cable (CAT 5 or higher).
Turn on the DHCP server function of your router. In case your router does not have the built-in DHCP server function, it is necessary to set up the network manually. For details, see Setting network connection on page 53.

LAN terminal specifications

- LAN terminal : Ethernet jack (10BASE-T/100BASE-TX)

Notes

- When connecting to the network via wireless LAN, or when using the *Bluetooth* feature, use with the wireless antenna upright.
- The range limit of the wireless antenna is indicated in the following diagram. Applying unneccessary force may result in damage.

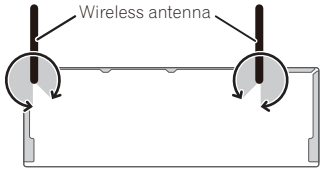

- Refer to the operation manual of the equipment you have as the connected equipment and connection method may differ depending on your Internet environment.
- When using a broadband Internet connection, a contract with an Internet service provider is required. For more details, contact your nearest Internet service provider.

Connecting an iPod

This receiver has a dedicated iPod terminal that will allow you to control playback of audio content from your iPod using the controls of this receiver.

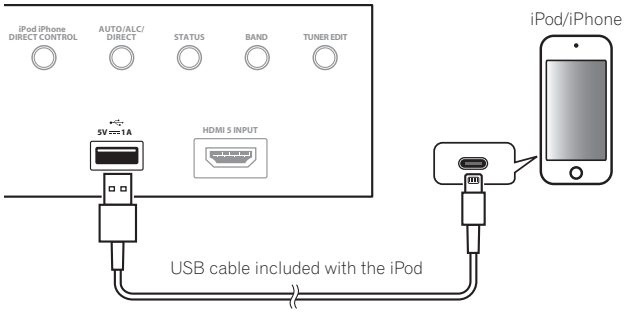

Tip

- An iPod/iPhone can be connected to the receiver. For details on supported models and versions of the respective products, see Playing an iPod on page 65.

● **Switch the receiver into standby, and then use the iPod cable to connect your iPod to the iPod/iPhone terminal on the front panel of this receiver.**

- For the cable connection, also refer to the operating instructions for your iPod.
- When connecting an iPhone to this unit, keep the iPhone at least 20 cm (0.66 ft) away from this unit. If the iPhone is kept closer to this unit and a telephone call is received by the iPhone, noise may be output from this device.
- iPod recharging occurs whenever an iPod is connected to this unit. (Recharging is enabled only when the unit's power is turned on.)
- For instructions on playing the iPod, see Playing an iPod on page 65.

Connecting a USB device

It is possible to play audio and photo files by connecting USB devices to this receiver.

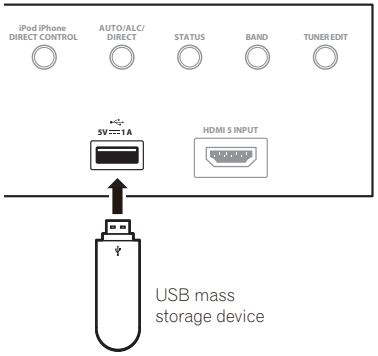

● **Switch the receiver into standby then connect your USB device to the USB terminal on the front panel of this receiver.**

- This receiver does not support a USB hub.
- For instructions on playing the USB device, see Playing a USB device on page 66.

Connecting an MHL-compatible device

An MHL-compatible mobile device can be connected to enjoy 3D/Full-HD videos, high quality multi-channel audio, and photos etc., with charge the battery on the receiver. Use the MHL cable to connect the device.

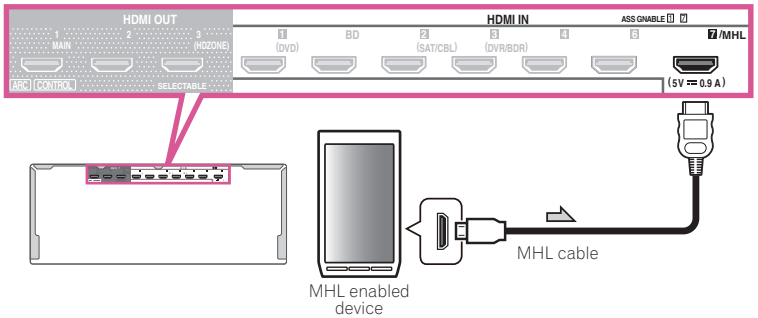

● **Switch the receiver into standby then use the MHL cable to connect your MHL enabled device to the MHL terminal on the rear panel of this receiver.**

- To automatically switch to the MHL input when an MHL-compatible device is connected, see MHL Setup on page 115.
- The MHL-compatible device is recharged whenever it is connected to this unit. (Recharging is enabled only when the unit's power is turned on.)
- For instructions on playing the MHL-compatible device, see Playing an MHL-compatible device on page 67.
- Do not place the MHL device on this unit which has the power turned on.

Connecting an HDMI-equipped component to the front panel input

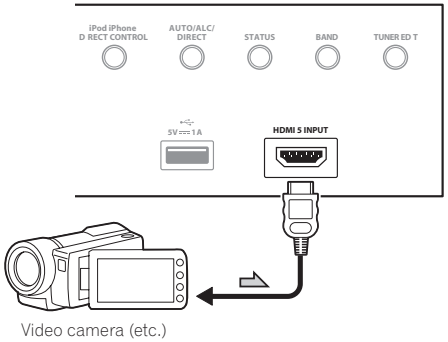

Using a USB cable to connect to a computer

SC-99 only

By using a USB cable (sold separately) to connect this unit's **USB-DAC IN** terminal to the USB port on a computer, this unit can be used as a D/A converter.
For details regarding the output of signals input to the **USB-DAC IN** terminal, see Playing music from a computer on page 68.

Important

- The exclusive driver must be installed on the computer in order to play high sound quality files of over 48 kHz/24 bits.
  The driver software is provided on the included CD-ROM.
- When installing the driver, this receiver and the computer must be connected as shown below. After connecting, turn this receiver's power on and select the **USB-DAC** input for the main zone. Note that for Mac OS, there is no need to install the driver software.

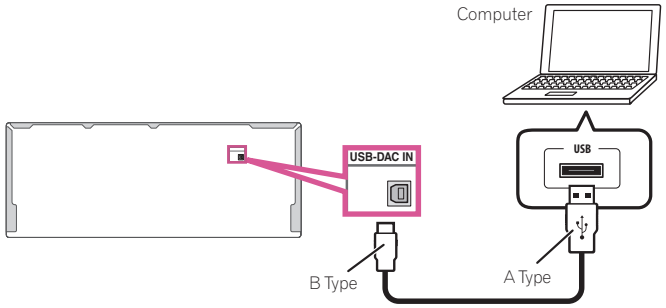

Note

- This unit cannot be used to play audio files from a computer unless Media Player is installed on the connected computer.

Connecting an IR receiver

If you keep your stereo components in a closed cabinet or shelving unit, or you wish to use the sub zone remote control in another zone, you can use an optional IR receiver (such as a Niles or Xantech unit) to control your system instead of the remote sensor on the front panel of this receiver.

- Remote operation may not be possible if direct light from a strong fluorescent lamp is shining on the IR receiver remote sensor window.
- Note that other manufacturers may not use the IR terminology. Refer to the manual that came with your component to check for IR compatibility.
- If using two remote controls (at the same time), the IR receiver's remote sensor takes priority over the remote sensor on the front panel.

1 Connect the IR receiver sensor to the IR IN jack on the rear of this receiver.

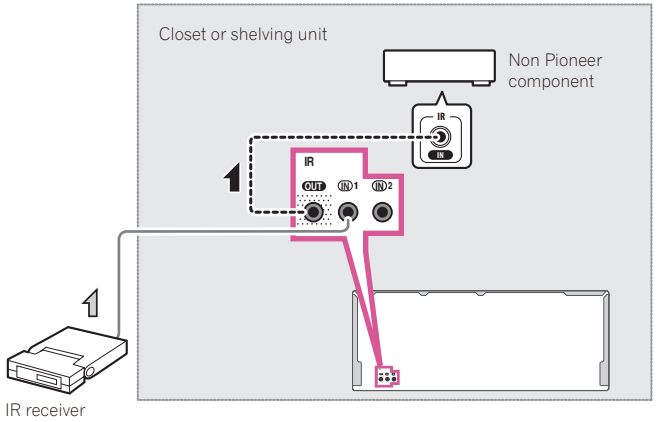

2 Connect the IR IN jack of another component to the IR OUT jack on the rear of this receiver to link it to the IR receiver.

Please see the manual supplied with your IR receiver for the type of cable necessary for the connection.

Switching components on and off using the 12 volt trigger

You can connect components in your system (such as a screen or projector) to this receiver so that they switch on or off using 12 volt triggers when you select an input function. However, you must specify which input functions switch on the trigger using the The Input Setup menu on page 61. Note that this will only work with components that have a standby mode.

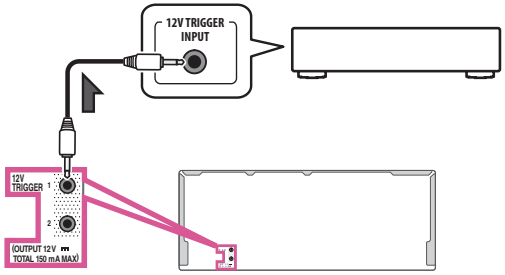

- **Connect the 12 V TRIGGER jack of this receiver to the 12 V trigger of another component.**

Use a cable with a mono mini-plug on each end for the connection.
After you've specified the input functions that will switch on the trigger, you'll be able to switch the component on or off just by pressing the input function(s) you've set on page 61.

Note

The 12V trigger can be associated not only with switching of the input function but also with switching of the **HDMI OUT** terminal. For details, see HDMI Setup on page 85.

Plugging in the receiver

Only plug in after you have connected all your components to this receiver, including the speakers.

CAUTION

- Handle the power cord by the plug part. Do not pull out the plug by tugging the cord, and never touch the power cord when your hands are wet, as this could cause a short circuit or electric shock. Do not place the unit, a piece of furniture, or other object on the power cord or pinch the cord in any other way. Never make a knot in the cord or tie it with other cables. The power cords should be routed so that they are not likely to be stepped on. A damaged power cord can cause a fire or give you an electric shock. Check the power cord once in a while. If you find it damaged, ask your nearest Pioneer authorized independent service company for a replacement.
- Do not use any power cord other than the one supplied with this unit.
- Do not use the supplied power cord for any purpose other than that described below.
- The receiver should be disconnected by removing the mains plug from the wall socket when not in regular use, e.g., when on vacation.
- Make sure the blue ⏻ **STANDBY/ON** light has gone out before unplugging.

1 Plug the supplied power cord into the AC IN socket on the back of the receiver.

2 Plug the other end into a power outlet.

Basic Setup

Initial settings of this receiver 51
Setting with a special application (Start-up Navi) 51
Perform settings using the AVNavigator built into this receiver 51
Setting by referring to the operating instructions 53
Setting network connection 53
Automatically conducting optimum sound tuning (Full Auto MCACC) 59
The Input Setup menu 61
Changing the OSD display language (OSD Language) 62

Initial settings of this receiver

There are three ways to initialize this receiver.

- Setting with a special application (Start-up Navi) on page 51
- Perform settings using the AVNavigator built into this receiver on page 51
- Setting by referring to the operating instructions on page 53

Important

- After unpacking, turning on the power, and returning to initial factory settings (page 97), the **WIRELESS** indicator slowly flashes. This is not a malfunction.
- This receiver is designed to automatically enter WAC mode when turning on the power of this receiver in the initial factory settings state. For details about WAC mode, please refer to page 55. After the network settings (page 53) have been completed, the **WIRELESS** indicator flashing disappears.
- When using the receiver without connecting to the network, set the **Network Type** setting to **Wired** (page 54).

Setting with a special application (Start-up Navi)

If you have a smart phone or tablet, once you download and start the special application, the settings can be done according to the instructions by the application.

- For those using an iPad, iPhone, or iPod touch
- If you have an Android device

Perform settings using the AVNavigator built into this receiver

If you have a Windows PC or Mac, the settings can be performed using the AVNavigator built into this receiver.

How to use the built-in AVNavigator

The built-in AVNavigator is equipped with **Wiring Navi**, which allows you to perform connection of this receiver and initial settings in interactive mode. By simply following the screen prompts to connect and set the unit, highly accurate initial settings can be performed easily.
Additionally, in order to use various functions easily, contents linked to the receiver can be used.

Operating Environment

- AVNavigator can be used in the following environments.
  - —Windows PC: Microsoft® Windows Vista®/Windows® 7/Windows® 8/Windows® 8.1
  - —Mac: OS X v 10 9 or 10.8
  - —iPad/iPhone/iPod touch: iOS 6.1 or later
  - —Android operation confirmation device:
    SONY XPERIA Z1 (OS 4.2.2)
    SAMSUNG GALAXY S5 (OS 4.4.2)
    HTC One S (OS 4.1.1)
    Google Nexus 5 (OS 4.4.4)
- AVNavigator uses an Internet browser. The following browsers are supported:
  - —Windows PC: Internet Explorer® 8, 9, 10, 11
  - —Mac/iPad/iPhone/iPod touch: Safari 6.0, 7.0
  - —Android device: Android browser
- Depending on the computer network setting or security setting, AVNavigator may not operate.

Using AVNavigator

Important

- Connect the LAN terminal to the network (page 47).
- When the **WIRELESS** indicator blinks slowly, AVNavigator cannot be started. WAC Mode is on in this case. Refer to page 55 for information about WAC Mode. Turn this receiver's power off, and then turn it on again after re-attaching the LAN cable.

1 Press ⏻ STANDBY/ON to switch on the receiver and your computer.

2 Launch AVNavigator.

Operate AVNavigator by following the screen prompts of your computer, etc.

- If using a Windows PC, complete the below steps to start up.
  ① Start up Internet Explorer on your PC (open any random Internet page).
  ② Press **STATUS** on the remote control and check the front panel display on the receiver (the IP address of the receiver will appear).

(Example Text Display)

If 0.0.0.0, 192.168.1.1 or 169.254.112.202 appears in the address, it indicates that the receiver is not connected to the network. Check to make sure that the receiver and router are properly connected.
③ Enter number in ② above in the field in Internet Explorer shown below and then press the ENTER key.

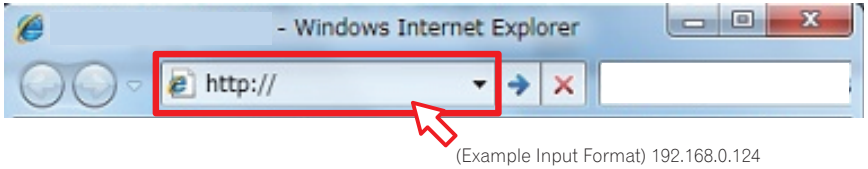

(Example Input Format) 192.168.0.124

- With a Windows PC, you can use the following method to launch AVNavigator.
  Launch Explorer and right-click <SC-99> or <SC-97> displayed in the '**Network**' folder, then click '**View device webpage**'.

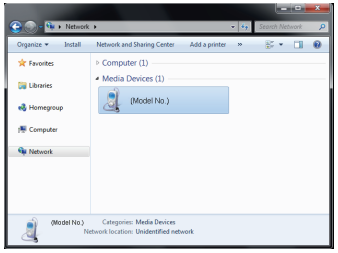

- On a Mac, launch Safari and click <SC-99> or <SC-97> displayed in '**Bonjour**' on the Bookmarks bar.

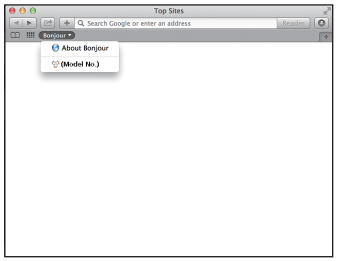

— If '**Bonjour**' is not displayed, tick the '**Include Bonjour in the Favorites bar**' check box on the '**Advanced**' tab in the Safari '**Preferences...**' menu.

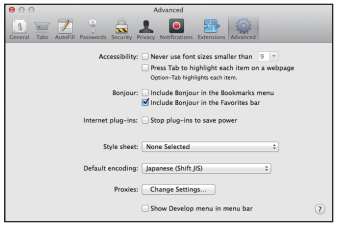

- When using an iPad/iPhone/iPod touch, from the App Store, download iControlAV5, which is a free application. After launching iControlAV5, follow the instructions on the screen. After that, on the Home screen, tap '**AVNavigator**' or the icon.

iPad

iPhone/iPod touch

- When using an Android device, from Google Play Store, download iControlAV5, which is a free application. After launching iControlAV5, follow the instructions on the screen. After that, on the Home screen, tap the icon.

3 Select and use the desired function.

AVNavigator includes the following functions:

- **Wiring Navi** – Guides you through connections and initial settings in dialog fashion. High precision initial settings can be made easily.
- **Interactive Operation Guide** – The receiver will be operated using the remote control on the screen and you can view function explanations or videos. Explanations of the functions that are operated using the remote control are also automatically displayed.
- **Network Setup** – Used to make network-related settings.

Setting by referring to the operating instructions

Use **HOME MENU** when referring to the operating instructions for various settings.

About the Home Menu

This receiver's Home Menu (**HOME MENU**) can be used to make various settings and to check and adjust items that have been set.

- With factory default settings, the Home Menu screen will be output from all HDMI output terminals and displayed on any TV connected via HDMI cable. You can change where the screen is output in the **MAIN/HDZONE** (page 117) and HDMI output (page 94) settings.
- **HOME MENU** may not start immediately after turning the main power of this receiver on or when settings have been changed. In such case, operate after a while.

1 Press MAIN RECEIVER to switch the remote control to the receiver operation mode.

2 To display the Home Menu screen, press HOME MENU on the remote control.

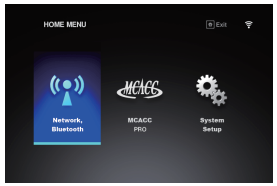

A Graphical User Interface (GUI) screen appears on your TV. Use ⬆/⬇/⬅/➡ and **ENTER** to navigate through the screens and select menu items. Press **RETURN** to exit the current menu.
The top level in the Home Menu is as shown below. Refer to the respective explanations to set, check and adjust as necessary.

- **Network, Bluetooth** – Conducts the setup necessary to connect this unit to the network (see Setting network connection on page 53).
- **MCACC PRO** – Use this to make automatic settings and detailed manual settings for the surround sound. For details, see Making receiver settings from the MCACC PRO menu on page 105.
- **System Setup** – Use this to make various settings related to this system. For details, see Making receiver settings from the System Setup menu on page 113.

Setting network connection

Important

- After unpacking, turning on the power, and returning to initial factory settings (page 97), the **WIRELESS** indicator slowly flashes. This is not a malfunction.
- This receiver is designed to automatically enter WAC mode when turning on the power of this receiver in the initial factory settings state. For details about WAC mode, please refer to page 55. After the network settings (page 53) have been completed, the **WIRELESS** indicator flashing disappears.
- When using the receiver without connecting to the network, set the **Network Type** setting to **Wired** (page 54).

This part explains the connection settings for all networks.

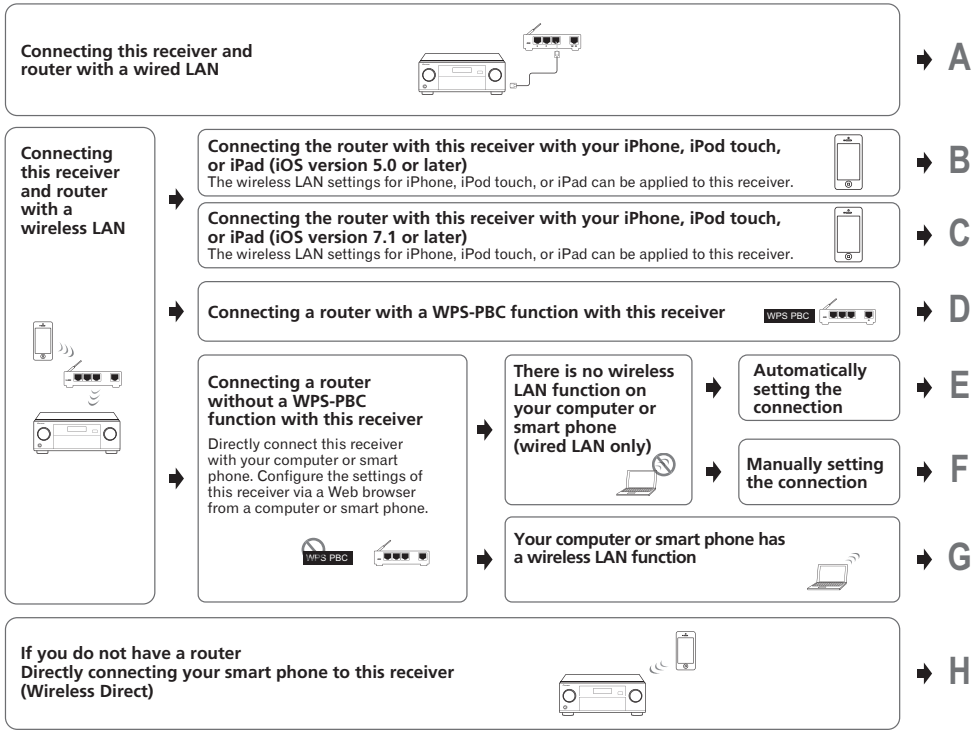

- When connection method B, C, D, E, F, or G is selected, check that the LAN cable is not connected to this receiver.
- Warning when connecting a wireless LAN router with this receiver
  SSID is compatible only with single-byte alphanumerical characters and some symbols such as the underbar. If characters other than these are used, change the SSID before executing network settings. Refer to the user's manual for your router for information on SSID.
- Some network functions may not be used with Wireless Direct. iControlAV5, AirPlay, and HTC connect can be used.

When setting this receiver by A–H, first show the settings screen using the following procedures.

1 Press MAIN RECEIVER to switch the remote control to the receiver operation mode, and then press HOME MENU.

A Graphical User Interface (GUI) screen appears on your TV. Use ⬆/⬇/⬅/➡ and **ENTER** to navigate through the screens and select menu items. Press **RETURN** to exit the current menu.

2 Select 'Network, Bluetooth' from the HOME MENU.

3 Select the setting you want to adjust.

If you are doing this for the first time, you may want to adjust these settings in order:

- **Network Information** – The setting status of the following network-related items can be checked (page 58).
- **Network Type** – Select the network connection method.
- **Network Connection** – Connect to the network.
- **Network Option** – Set the network other than for connection (page 58).
- **Bluetooth Setup** – Set Bluetooth (page 58).

A: Connecting with a LAN cable (wired LAN)

Simply connect the LAN cable. Network settings are unnecessary.

- When wireless LAN is set once, the following procedures 1 through 3 must be executed.
- Only when connected to a network without a DHCP server function, the following network settings are necessary. Check the setting value with the provider or network administrator in advance when executing the settings. Also refer to the user's manual for network equipment.
- **IP Address**
  The IP address to be entered must be defined within the following ranges. If the IP address defined is beyond the following ranges, you cannot play back audio files stored on components on the network or listen to Internet radio stations.
  Class A: 10.0.0.1 to 10.255.255.254
  Class B: 172.16.0.1 to 172.31.255.254
  Class C: 192.168.0.1 to 192.168.255.254
- **Subnet Mask**
  In case an xDSL modem or a terminal adapter is directly connected to this receiver, enter the subnet mask provided by your ISP on paper. In most cases, enter 255.255.255.0.
- **Default Gateway**
  In case a gateway (router) is connected to this receiver, enter the corresponding IP address.
- **Primary DNS Server**/**Secondary DNS Server**
  In case there is only one DNS server address provided by your ISP on paper, enter it in the '**Primary DNS Server**' field. In case there are more than two DNS server addresses, enter '**Secondary DNS Server**' in the other DNS server address field.
- **Proxy Hostname**/**Proxy Port**
  This setting is required when you connect this receiver to the Internet via a proxy server. Enter the IP address of your proxy server in the '**Proxy Hostname**' field. Also, enter the port number of your proxy server in the '**Proxy Port**' field.

1 Select 'Network Type' from the Network, Bluetooth menu.

2 Use ⬅/➡ to select 'Wired'.

3 Select 'OK', then press ENTER.

The confirmation screen will be displayed. Select '**YES**' and press **ENTER**.
The on-screen display will close, and the home menu will be disabled for about 60 seconds. After 60 seconds, execute the following operation.

4 Press HOME MENU.

5 Select 'Network, Bluetooth' from the HOME MENU.

6 Select 'Network Connection' from the Network, Bluetooth menu.

7 Select 'Wired' from the Network Connection menu.

8 Select the DHCP setting you want.

When you select **ON**, the network is automatically set up, and you do not need to follow Steps 9. Proceed with Step 10.
If there is no DHCP server on the network and you select **ON**, this receiver will use its own Auto IP function to determine the IP address.

- The IP address determined by the Auto IP function is 169.254.X.X. You cannot listen to an Internet radio station if the IP address is set for the Auto IP function.

9 Enter the IP Address, Subnet Mask, Default Gateway, Primary DNS Server and Secondary DNS Server.

Press ⬆/⬇ to select a number and ⬅/➡ to move the cursor.

10 Select 'OFF' or 'ON' for the Enable Proxy Server setting to deactivate or activate the proxy server.

In case you select '**OFF**', proceed with Step 13. In case you select '**ON**', on the other hand, proceed with Step 11.

11 Enter the address of your proxy server or the domain name.

Use ⬆/⬇ to select a character, ⬅/➡ to set the position, and **ENTER** to confirm your selection.

12 Enter the port number of your proxy server.

Use ⬆/⬇ to select a character, ⬅/➡ to set the position, and **ENTER** to confirm your selection.

13 Select 'OK' to confirm the IP Address/Proxy setup.

B: Setting this receiver with iOS equipment (iOS version 5.0 or later)

The Wi-Fi settings of your iPod/iPhone/iPad (equipment with iOS version 5.0 or later) can be applied to this receiver.

- The iOS equipment and router must be connected through Wi-Fi.
- Check that the LAN cable is not connected to this receiver.

1 Unlock the iPod/iPhone/iPad.

Check that the Wi-Fi operation mark is shown on the screen of the iOS equipment.

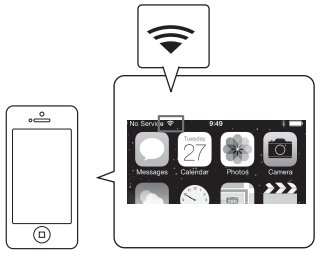

2 Select 'Network Type' from the Network, Bluetooth menu.

3 Use ⬅/➡ to select 'Wireless'.

4 Select 'OK', then press ENTER.

The confirmation screen will be displayed. Select '**YES**' and press **ENTER**.
The on-screen display will close, and the home menu will be disabled for about 60 seconds. After 60 seconds, execute the following operation.

5 Press HOME MENU.

6 Select 'Network, Bluetooth' from the HOME MENU.

7 Select 'Network Connection' from the Network, Bluetooth menu.

8 Select 'Wireless' from the Network Connection menu.

9 Select 'Wi-Fi Sharing'

10 Connect the iOS equipment to the iPod/iPhone terminal on the front panel.

11 Select 'START', then press ENTER.

12 Tap [Allow] on iPod/iPhone/iPad.

The Wi-Fi settings of your iPod/iPhone/iPad is applied to this receiver.

C: Perform this receiver's settings using the iOS equipment (iOS version 7.1 or later)

The Wi-Fi settings of your iPod/iPhone/iPad (equipment with iOS version 7.1 or later) can be applied to this receiver.

- The iOS equipment and router must be connected through Wi-Fi.
- Check that the LAN cable is not connected to this receiver.

1 Unlock the iPod/iPhone/iPad.

Check that the Wi-Fi operation mark is shown on the screen of the iOS equipment.

2 Select 'Network Type' from the Network, Bluetooth menu.

3 Use ⬅/➡ to select 'Wireless'.

4 Select 'OK', then press ENTER.

The confirmation screen will be displayed. Select '**YES**' and press **ENTER**.
The on-screen display will close, and the home menu will be disabled for about 60 seconds. After 60 seconds, execute the following operation.

5 Press HOME MENU.

6 Select 'Network, Bluetooth' from the HOME MENU.

7 Select 'Network Connection' from the Network, Bluetooth menu.

8 Select 'Wireless' from the Network Connection menu.

9 Select 'Wireless Accessory Config.'.

WAC (Wireless Accessory Configuration) mode is a mode that allows you to set the network settings by operating this receiver as a Wi-Fi access point.

10 Select 'START', then press ENTER.

The SSID and IP address will be displayed when WAC is active.

11 Select 'OK', then press ENTER.

12 Operate the screen of the iPhone, iPod touch, or iPad.

- Check that the Wi-Fi mark is displayed on the screen of the iPhone, iPod touch, or iPad.
  If the mark is not displayed, activate Wi-Fi, and connect the iPhone, iPod touch, or iPad to a wireless LAN router.
- Select the settings.

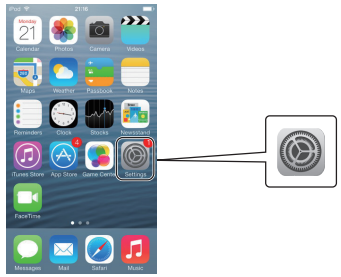

⬇

- Select [Wi-Fi].

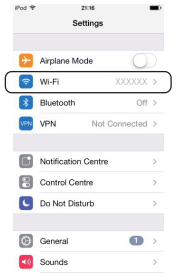

⬇

- In [Set new AIRPLAY speaker], select Friendly Name (iOS 7) or SSID (iOS 6 or older).

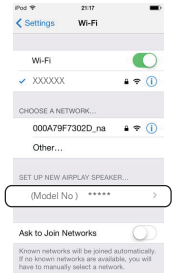

⬇

- Select [Next].

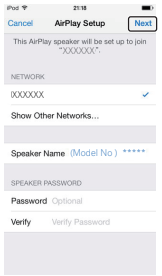

⬇

- Wait until the processing is complete.

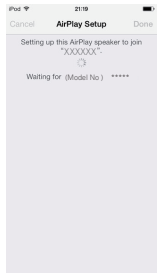

⬇

- Select [Complete].

Note

This screen is iOS 7.1. When software other than iOS 7.1 is installed on an iPhone, iPod touch, or iPad, the operation for the iPhone, iPod touch, or iPad may change.

D: WPS connection settings

WPS is an abbreviation for "Wi-Fi Protected Setup". This is a standard stipulated by the Wi-Fi Alliance, and connection to WPS compatible equipment and security settings can be performed using simple operations.
This receiver is compatible with PBC (push button) method and PIN method.

- Check that your router is compatible with PBC. If the router is not PBC-compatible, connect using the PIN method.
- Check that the LAN cable is not connected to this receiver.

1 Select 'Network Type' from the Network, Bluetooth menu.

2 Use ⬅/➡ to select 'Wireless'.

3 Select 'OK', then press ENTER.

The confirmation screen will be displayed. Select '**YES**' and press **ENTER**.
The on-screen display will close, and the home menu will be disabled for about 60 seconds. After 60 seconds, execute the following operation.

4 Press HOME MENU.

5 Select 'Network, Bluetooth' from the HOME MENU.

6 Select 'Network Connection' from the Network, Bluetooth menu.

7 Select 'Wireless' from the Network Connection menu.

8 Select 'WPS'.

9 At ⬆/⬇, select 'PBC' or 'PIN Input' and press ENTER.

When the router is compatible with the PBC function, select '**PBC**'.

- **PBC** (Push-button method) – Connection settings are automatically done by simply pressing the WPS button on wireless LAN equipment that is WPS-compatible. Follow the instructions shown on the screen of this receiver. This setting method is available when there is a WPS button on the wireless LAN equipment which is WPS-compatible, and is the easiest method for connection settings.
- **PIN Input** – Indicate the SSID list of connectable access points, and select the desired access point for connection. Connection settings are performed by entering the access point to which the 8-digit PIN code shown on the screen of this receiver is to be connected.
  1 Select the connection point to which the wireless LAN is to be connected with ⬆/⬇, and press **ENTER**. The PIN code will be shown.
  2 Check the PIN code of this receiver.
  3 Enter the PIN code in the access point.
  Enter in the access point whose indicated PIN code is shown within two minutes after closing the PIN code confirmation screen. Success or failure of connection will be indicated on the screen.
  The PIN code input method varies depending on wireless LAN equipment. For details, refer to the user's manual of the wireless LAN equipment.

E: Automatically setting wireless LAN connection

1 Select 'Network Type' from the Network, Bluetooth menu.

2 Use ⬅/➡ to select 'Wireless'.

3 Select 'OK', then press ENTER.

The confirmation screen will be displayed. Select '**YES**' and press **ENTER**.
The on-screen display will close, and the home menu will be disabled for about 60 seconds. After 60 seconds, execute the following operation.

4 Press HOME MENU.

5 Select 'Network, Bluetooth' from the HOME MENU.

6 Select 'Network Connection' from the Network, Bluetooth menu.

7 Select 'Wireless' from the Network Connection menu.

8 At ⬆/⬇, select 'Auto' and press ENTER.

9 Select the connection point to which the wireless LAN is to be connected with ⬆/⬇, and press ENTER.

10 Enter the password or WEP KEY at ⬆/⬇/⬅/➡, and press ENTER.

- ⬅/➡ – Moves the cursor.
- ⬆/⬇ – Selects the character to be entered.
- **VIDEO P.** – The cursor switches the input character part and software keyboard part every time the button is pressed. A character is deleted by pressing the **DEL** on the software keyboard.

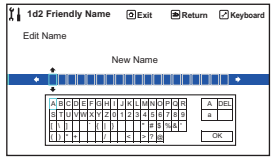

11 Select the DHCP setting you want.

Set the IP address of this receiver and the proxy. For details, see A: Connecting with a LAN cable (wired LAN) on page 54.

F: Manually setting wireless LAN connection

1 Select 'Network Type' from the Network, Bluetooth menu.

2 Use ⬅/➡ to select 'Wireless'.

3 Select 'OK', then press ENTER.

The confirmation screen will be displayed. Select '**YES**' and press **ENTER**.
The on-screen display will close, and the home menu will be disabled for about 60 seconds. After 60 seconds, execute the following operation.

4 Press HOME MENU.

5 Select 'Network, Bluetooth' from the HOME MENU.

6 Select 'Network Connection' from the Network, Bluetooth menu.

7 Select 'Wireless' from the Network Connection menu.

8 Select [Manual] with the ⬆/⬇ button, and press the ENTER button.

9 Enter the SSID with the ⬆/⬇/⬅/➡ button, and press the ENTER button.

- ⬅/➡ – Moves the cursor.
- ⬆/⬇ – Selects the character to be entered.
- **VIDEO P.** – The cursor switches the input character part and software keyboard part every time the button is pressed. A character is deleted by pressing the **DEL** on the software keyboard.

10 Select the encryption method with ⬅/➡.

- **None** – Does not set the encryption method.
- **WEP** – Set to the WEP method.
- **WPA2/WPA, AES+TKIP** – Set to the WPA-AES, WPA-TKIP, WPA2-AES, and WPA2-TKIP method.

11 Select 'OK', then press ENTER.

When **WEP** or **WPA2/WPA, AES+TKIP** is selected, the password entry screen is displayed. Enter the password, select **OK**, and press **ENTER**.

12 Select the DHCP setting you want.

Set the IP address of this receiver and the proxy. For details, see A: Connecting with a LAN cable (wired LAN) on page 54.

G: Setting with Web Control

To set with this method, your computer must be compatible with wireless LAN functions.
Network settings are performed on the browser on your computer.

- Check that the LAN cable is not connected to this receiver.

1 Select 'Network Type' from the Network, Bluetooth menu.

2 Use ⬅/➡ to select 'Wireless'.

3 Select 'OK', then press ENTER.

The confirmation screen will be displayed. Select '**YES**' and press **ENTER**.
The on-screen display will close, and the home menu will be disabled for about 60 seconds. After 60 seconds, execute the following operation.

4 Press HOME MENU.

5 Select 'Network, Bluetooth' from the HOME MENU.

6 Select 'Network Connection' from the Network, Bluetooth menu.

7 Select 'Wireless' from the Network Connection menu.

8 Select 'Wireless Accessory Config.'.

9 Select 'START', then press ENTER.

The SSID and IP address will be displayed when WAC is active.

10 Select 'OK', then press ENTER.

11 Select [Pioneer Setup] (this receiver) from the list of wireless LAN connections on your computer.

[**Pioneer Setup**:**xxxxxxxx**] will be shown in the SSID field. "**xxxxxxxx**" represents a number unique to each product.

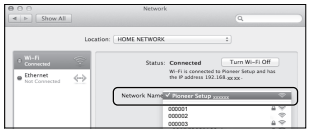

- For your computer, iPhone, tablet computer, or wireless equipment, refer to the respective user's manual.
- Because this connection is not encrypted, there is a slight security risk.
- Operation verification has been done for this setting with OS X v 10.7, Safari 5.1.

12 Start the Web browser.

Access the following URL, and start setting this receiver. The Web Control menu will be shown.

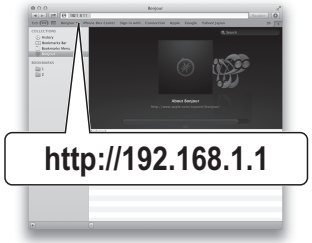

- If you are using Safari, see Making network settings using Safari on page 119.

13 Click Network Configuration.

14 Setup the network settings manually and then press Apply.

SSID items are generally shown automatically, but if they are not shown follow the procedures again and redo the settings. This receiver will restart and the settings will be applied to this receiver.

H: Directly connecting this receiver with a smart phone by wireless (Wireless Direct)

1 Select 'Network Connection' from the Network, Bluetooth menu.

2 Select 'Wireless Direct' from the Network Connection menu.

3 Select 'Security Protocol' at ⬆/⬇.

4 Select the encryption method with ⬅/➡.

- **None** – Does not set the encryption method.
  — Because this connection is not encrypted, there is a slight security risk.
  — When the main power of this receiver is turned off, Wireless Direct is not started when it is turned on next time, and will operate with the network settings before Wireless Direct is started.
- **WEP** – Set to the WEP method.
  — Even when the main power of this receiver is turned off, Wireless Direct will continuously operate the next time it is turned on.

5 Select 'Frequency Band' at ⬆/⬇.

6 Select the frequency with ⬅/➡.

Select the frequency band of **Wireless Direct** connection. If you do not know the frequency band of your equipment, select **2.4GHz**.

- **2.4GHz** – Uses the band of 2.4 GHz.
- **5GHz** – Uses the band of 5 GHz.

7 Select 'OK', then press ENTER.

When **WEP** is selected, the WEP KEY input screen is displayed. Enter the WEP KEY in 5 or 13 characters, select **OK**, and press **ENTER**.

8 Select 'YES' and press ENTER.

9 Select the SSID shown on the screen of this receiver from the list of wireless connection LAN's corresponding to the equipment that you have.

- If the password is requested, enter the WEP KEY in procedure 7.

Checking the Network Information

The setting status of the following network-related items can be checked.

- **IP Address** (IPv4) – Check the IP address of this receiver.
- **IP Address** (IPv6) – Check the IP address of this receiver.
- **MAC Address** – Check the MAC address of this receiver.
- **Friendly Name** – Friendly Name on page 58.
- **SSID** – Check the SSID during wireless connection.
- **Network Connection** – Check the network connection status (**Wired**/**Wireless**/**Wireless Direct**).

● **Select 'Network Information' from the Network, Bluetooth menu.**

Display the setting status of the network-related items.

Performing *Bluetooth* settings

Switches the *Bluetooth* function on/off.

1 Select 'Bluetooth Setup' from the Network, Bluetooth menu.

2 Use ⬅/➡ to select the setting.

- **ON** – Selected when using the *Bluetooth* function.
- **OFF** – Selected when the *Bluetooth* function is not used.

3 Select 'OK', then press ENTER.

The confirmation screen will be displayed. Select '**YES**' and press **ENTER**.
The on-screen display will close, and the home menu will be disabled for about 60 seconds. After 60 seconds, execute the following operation.

Other network settings

Set the network other than for connection.

1 Press MAIN RECEIVER to switch the remote control to the receiver operation mode, and then press HOME MENU.

A Graphical User Interface (GUI) screen appears on your TV. Use ⬆/⬇/⬅/➡ and **ENTER** to navigate through the screens and select menu items. Press **RETURN** to exit the current menu.

2 Select 'Network, Bluetooth' from the HOME MENU.

3 Select 'Network Option' from the Network, Bluetooth menu.

4 Select the setting you want to adjust.

If you are doing this for the first time, you may want to adjust these settings in order:

- **Network Standby** – Even when the unit is in standby mode, it is possible to turn on the power of the unit from iControlAV5 (page 58).
- **Friendly Name** – The name of the receiver displayed on a computer or other device connected to the network can be changed (page 58).
- **AirPlay Password** – Set the password to be entered when playing AirPlay with this receiver (page 59).
- **Parental Lock** – Restricts usage of network functions (page 59).
- **Play ZONE Setup** – Select the zone for playing the audio contents of devices in the home network (page 59).
- **Port Number Setting** – Sets the numbers of the ports where signals from IP Control are received (page 59).

Network Standby

Set so that the iControlAV5 function connected to the same LAN with the receiver can be used even while the unit is in standby status.

1 Select 'Network Standby' from the Network Option menu.

2 Specify whether the Network Standby is ON or OFF.

- **ON** – Even when the receiver is in standby mode, you can power on the receiver from iControlAV5 on a device connected to the network. However, when network communications are cut, the receiver will switch to normal standby mode to conserve power when on standby. In this case, switch the remote control power on. Also, when using Wireless Direct, the network standby function does not work.
- **OFF** – The iControlAV5 function is not available while the receiver is in standby mode (power consumption during standby can be suppressed).

Friendly Name

1 Select 'Friendly Name' from the Network Option menu.

2 Select 'Edit Name' then select 'Rename'.

If after changing the name you want to restore the name to the default, select **Default**.

3 Input the name you want.

Use ⬆/⬇ to select a character, ⬅/➡ to set the position, and **ENTER** to confirm your selection.

AirPlay password

1 **Select 'AirPlay Password' from the Network Option menu.**

2 **Enter the password up to 32 characters, select 'OK', and press ENTER.**

3 **Select 'YES' and press ENTER.**

Parental Lock

Set restrictions for using Internet services. Also set the password accompanying the usage restrictions.
- Upon shipment from the factory, the password is set to "0000".

Important

When the **INTERNET RADIO**, **PANDORA**, **Spotify** or **FAVORITES** input is selected, the setting made here cannot be reflected.

1 **Select 'Parental Lock' from the Network Option menu.**

2 **Input the password.**

Use ⬆/⬇ to select a character, ⬅/➡ to set the position, and **ENTER** to confirm your selection.

3 **Specify whether to turn Parental Lock on or off.**
- **OFF** – Internet services are not restricted.
- **ON** – Internet services are restricted.

4 **If you want to change the password, select Change Password.**

In this case, the procedure returns to step 2.

Play ZONE Setup

You can select what zone to play when playing via AirPlay and *Bluetooth* equipped devices as well as when playing audio content on equipment in the home network in DMR mode.
- For playable DLNA-compatible network devices, see page 78.

1 **Select 'Play ZONE Setup' from the Network Option menu.**

2 **Select the zone in which you want to play the audio contents.**

3 **When you're finished, press RETURN.**

You will return to the **Network Option** menu.

Notes
- If another zone is on, it may not be possible to play the audio contents. In this case, turn the other zone off, then play the audio contents.
- **MAIN/HDZONE** at **ZONE Setup** must be set to **HDZONE** in order to use the **HDZONE** function (page 117).

Port Number Setting

On this receiver, there can be up to 5 numbers of ports where signals are received.

1 **Select 'Port Number Setting' from the Network Option menu.**

2 **Select the port number you want to change.**

3 **Input the port number.**
- Use ⬆/⬇ to select a character, ⬅/➡ to set the position, and **ENTER** to confirm your selection.
- It is not possible to set the same port number more than once.

4 **If there are other port numbers you want to change, repeat steps 2 and 3.**

Note

We recommend setting the port number to 00023 or within the range of 49152 to 65535.

Automatically conducting optimum sound tuning (Full Auto MCACC)

The Full Auto MCACC Setup measures the acoustic characteristics of your listening area, taking into account ambient noise, speaker connection and speaker size, and tests for both channel delay and channel level. When **Measurement Type** is **Expert**, in addition to this, Standing Wave, Reverb characteristics, Full Band Phase Control and EQ are measured. After you have set up the microphone provided with your system, the receiver uses the information from a series of test tones to optimize the speaker settings and equalization for your particular room.

Important
- Make sure the microphone and speakers are not moved during the Full Auto MCACC Setup.
- Using the Full Auto MCACC Setup will overwrite any existing settings for the MCACC preset you select.
- Before using the Full Auto MCACC Setup, the headphones should be disconnected.
- With factory default settings, the on-screen display will be output from all HDMI output terminals and displayed on any TV connected via HDMI cable. You can change where the screen is output in the **MAIN/HDZONE** (page 117) and HDMI output (page 94) settings.

CAUTION
- The test tones used in the Full Auto MCACC Setup are output at high volume.

1 **Press ⏻ STANDBY/ON to switch on the receiver and your TV.**

Make sure that the TV's video input is set to this receiver.

2 **Connect the microphone to the MCACC SETUP MIC jack on the front panel.**
- When connecting the MCACC setup microphone, if "**Please wait ...**" displays in the main unit display, remove the MCACC setup microphone, then try reconnecting after waiting for approximately one minute.

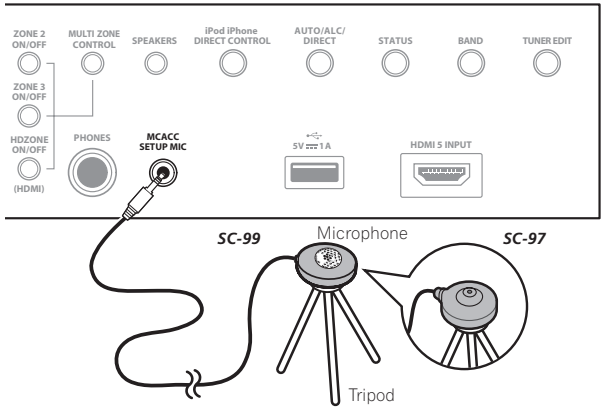

Make sure there are no obstacles between the speakers and the microphone.
If you have a tripod, use it to place the microphone so that it's about ear level at your normal listening position. If you do not have a tripod, use some other object to install the microphone.
Install the microphone on a stable floor. Placing the microphone on any of the following surfaces may make accurate measurement impossible:

- Sofas or other soft surfaces.
- High places such as tabletops and sofa tops.

The Full Auto MCACC display appears once the microphone is connected.

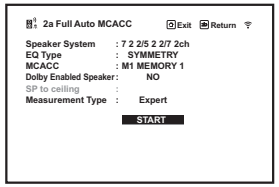

- If you leave the GUI screen for over five minutes, the screen saver will appear.

3 Press MAIN RECEIVER to switch the remote control to the receiver operation mode.

4 Select the parameters you want to set.

When the speaker system is not **7.2.2/5.2.2/7.2ch**, set **Speaker System** before measuring full auto MCACC. For details, see Speaker system setting on page 113.

- **Speaker System** – Shows the current settings. When this is selected and **ENTER** is pressed, the speaker system selection screen appears. Select the proper speaker system, then press **RETURN** to return.
  If you are planning on bi-amping your front speakers, or setting up a separate speaker system in another room, read through Speaker system setting on page 113 and make sure to connect your speakers as necessary before continuing to step 4.
- **EQ Type** – When you select **Expert** for **Measurement Type**, set the correction method of the frequency characteristics of the viewing environment. Usually, set **SYMMETRY**. For details, see Automatic MCACC (Expert) on page 105.
- **MCACC** – The six MCACC presets are used for storing surround sound settings for different listening positions. Simply choose an unused preset for now (you can rename it later in Data Management on page 110).
- **Dolby Enabled Speaker** – Select speakers that use Dolby Enabled Speaker (**TFw+TBw**, **TFw**, **TMd**, **TBw**). When Dolby Enabled Speaker is not used, select **NO** (page 21).
- **SP to ceiling** – When using the Dolby Enabled Speaker, you can input the vertical distance from the speaker to the ceiling (page 21).
- **Measurement Type** – When **Basic** is set, the minimum required measurement is performed in a short period of time. When **Expert** is set, accurate and precise measurement is performed so it will take some time.

5 Select 'START', then press ENTER.

6 Follow the instructions on-screen.

Make sure the microphone is connected, and if you're using a subwoofer, make sure it is switched on and set to a comfortable volume level.

7 Wait for the test tones to finish, then confirm the speaker configuration in the GUI screen.

A progress report is displayed on-screen while the receiver outputs test tones to determine the speakers present in your setup. Try to be as quiet as possible while it's doing this.
If no operations are performed for 10 seconds while the speaker configuration check screen is being displayed, the Full Auto MCACC Setup will resume automatically. In this case, you don't need to select '**OK**' and press **ENTER** in step 7.

- With error messages (such as **Too much ambient noise!** or **Check microphone.**), select **RETRY** after checking for ambient noise (see Problems when using the Auto MCACC Setup on page 61) and verifying the mic connection. If there doesn't seem to be a problem, you can simply select **GO NEXT** and continue.

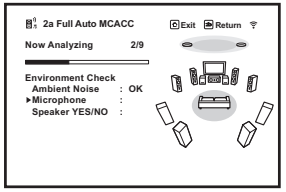

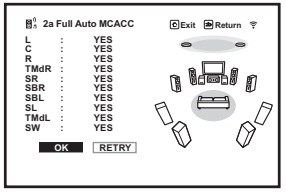

The configuration shown on-screen should reflect the actual speakers you have.

- If you see an **ERR** message (or the speaker configuration displayed isn't correct), there may be a problem with the speaker connection. If selecting **RETRY** doesn't work, turn off the power and check the speaker connections. If there doesn't seem to be a problem, you can simply use ⬆/⬇ to select the speaker and ⬅/➡ to change the setting and continue.
- If the speaker is not pointed to the microphone (listening position) or when using speakers that affect the phase (dipole speakers, reflective speakers, etc.), **Reverse Phase** may be displayed even if the speakers are properly connected.
  If **Reverse Phase** is displayed, the speaker's wiring (+ and –) may be inverted. Check the speaker connections.
  — If the connections were wrong, turn off the power, disconnect the power cord, then reconnect properly. After this, perform the Full Auto MCACC procedure again.
  — If the connections were right, select **GO NEXT** and continue.

8 Make sure 'OK' is selected, then press ENTER.

A progress report is displayed on-screen while the receiver outputs more test tones to determine the optimum receiver settings.
Again, try to be as quiet as possible while this is happening. It may take 3 to 10 minutes.

9 The Full Auto MCACC Setup procedure is completed and the Home Menu menu reappears automatically.

Be sure to disconnect the microphone from this receiver upon completion of the Full Auto MCACC Setup.
The settings made in the Full Auto MCACC Setup should give you excellent surround sound from your system, but it is also possible to adjust these settings manually using The MCACC PRO menu on page 104 or The System Setup and Other Setup menus on page 112.

- Depending on the characteristics of your room, sometimes identical speakers with cone sizes of around 12 cm (5 inches) will end up with different size settings. You can correct the setting manually using the Manual speaker setup on page 113.
- The subwoofer distance setting may be farther than the actual distance from the listening position. This setting should be accurate (taking delay and room characteristics into account) and generally does not need to be changed.
- If Full Auto MCACC Setup measurement results are incorrect due to the interaction of the speakers and viewing environment, we recommend adjusting the settings manually.
- The Dolby Enabled Speaker distance indicates the distance of the ceiling reflection. Therefore, it is longer than the direct distance but you do not need to change this (page 21).
- When Full Auto MCACC or Auto MCACC is selected, all of the EQ adjustment values for Dolby Enabled Speaker are set to 0 dB. You can adjust the settings manually.

Problems when using the Auto MCACC Setup

If the room environment is not optimal for the Auto MCACC Setup (too much background noise, echo off the walls, obstacles blocking the speakers from the microphone) the final settings may be incorrect. Check for household appliances (air conditioner, fridge, fan, etc.), that may be affecting the environment and switch them off if necessary. If there are any instructions showing in the front panel display, please follow them.

- Some older TVs may interfere with the operation of the microphone. If this seems to be happening, switch off the TV when doing the Auto MCACC Setup.

The Input Setup menu

You only need to make settings in the **Input Setup** menu if you didn't hook up your digital equipment according to the default settings (see Input function default and possible settings on page 61). In this case, you need to tell the receiver what equipment is hooked up to which terminal so the buttons on the remote control correspond to the components you've connected.

- With factory default settings, the on-screen display will be output from all HDMI output terminals and displayed on any TV connected via HDMI cable. You can change where the screen is output in the **MAIN/HDZONE** (page 117) and HDMI output (page 94) settings.

1 Press MAIN RECEIVER to switch the remote control to the receiver operation mode, and then press HOME MENU.

A Graphical User Interface (GUI) screen appears on your TV. Use ⬆/⬇/⬅/➡ and **ENTER** to navigate through the screens and select menu items. Press **RETURN** to exit the current menu.

2 Select 'System Setup' from the HOME MENU.

3 Select 'Input Setup' from the System Setup menu.

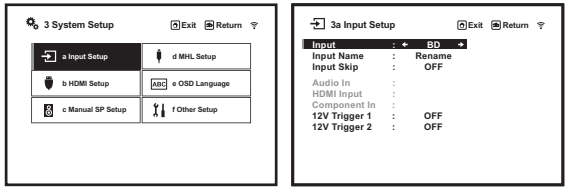

4 Select the input function that you want to set up.

The default names correspond with the names next to the terminals on the rear panel (such as **DVD** or **SAT/CBL** which, in turn, correspond with the names on the remote control.

5 Select the input(s) to which you've connected your component.

For example, if your DVD player only has an optical output, you will need to change the **DVD** input function's **Audio In** setting from **COAX-1** (default) to the optical input you've connected it to.

6 When you're finished, proceed to the settings for other inputs.

There are optional settings in addition to the assignment of the input jacks:

- **Input Name** – You can choose to rename the input function for easier identification. Select **Rename** to do so, or **Default** to return to the system default.
- **Input Skip** – When set to **ON**, that input is skipped when selecting the input using **ALL**. (**DVD** and other inputs can be still be selected directly with the input function buttons.)
- **12V Trigger 1/2** – After connecting a component to one of the 12 volt triggers (see Switching components on and off using the 12 volt trigger on page 49), select **MAIN**, **ZONE 2**, **ZONE 3**, **HDZONE** or **OFF** for the corresponding trigger setting to switch it on automatically along with the (main or sub) zone specified.
  — Devices connected to 12 volt triggers can be associated with **HDMI OUT** switching. For details, see HDMI Setup on page 85.

7 When you're finished, press RETURN.

You will return to the **System Setup** menu.

Input function default and possible settings

The terminals on the receiver generally correspond to the name of one of the input functions. If you have connected components to this receiver differently from (or in addition to) the defaults below, see The Input Setup menu on page 61 to tell the receiver how you've connected up. The dots (●) indicate possible assignments.

Input function	Input Terminals		
	HDMI	Audio	Component
BD	(BD)		
DVD	IN 1	COAX-2	IN 2
SAT/CBL	IN 2	COAX-1	IN 1
DVR/BDR	IN 3	OPT-2	●
HDMI 1	●		
HDMI 2	●		
HDMI 3	●		
HDMI 4	IN 4		
HDMI 5 (front panel)	IN 5		
HDMI 6	IN 6		
HDMI 7/MHL	IN 7		
INTERNET RADIO			
PANDORA			
Spotify			
MEDIA SERVER			
FAVORITES			
iPod/USB			
USB-DAC <a>			
TV		OPT-1 <b>	
CD		ANALOG-1 <c>	
TUNER			
PHONO			
MULTI CH IN <a>	●		
BT AUDIO			

a SC-99 only
b When **ARC** at **HDMI Setup** is set to **ON**, it is not possible to make assignments to the **TV** input's **Audio In** terminals.
c Only the **TV** and **CD** inputs can be assigned to **ANALOG-1**.

Changing the OSD display language (OSD Language)

The language used on the Graphical User Interface screen can be changed.

- The explanations in these operating instructions are for when English is selected for the GUI screen.
- With factory default settings, the on-screen display will be output from all HDMI output terminals and displayed on any TV connected via HDMI cable. You can change where the screen is output in the **MAIN/HDZONE** (page 117) and HDMI output (page 94) settings.

1 Press ⏻ STANDBY/ON to switch on the receiver and your TV.

Make sure that the TV's video input is set to this receiver (for example, if you connected this receiver to the **VIDEO** jacks on your TV, make sure that the **VIDEO** input is now selected).

2 Press MAIN RECEIVER to switch the remote control to the receiver operation mode, and then press HOME MENU.

A Graphical User Interface (GUI) screen appears on your TV. Use ⬆/⬇/⬅/➡ and **ENTER** to navigate through the screens and select menu items. Press **RETURN** to exit the current menu.

3 Select 'System Setup' from the Home Menu.

4 Select 'OSD Language' from the System Setup menu.

5 Select the desired language.

6 Select 'OK' to change the language.

The setting is completed and the **System Setup** menu reappears automatically.

Basic playback

Playing a source 64
Playing an iPod 65
Playing a USB device 66
Playing an MHL-compatible device 67
Playing music from a computer 68
Listening to the radio 68
Music playback using *Bluetooth* wireless technology 69

Playing a source

Here are the basic instructions for playing a source (such as a DVD disc) with your home theater system.

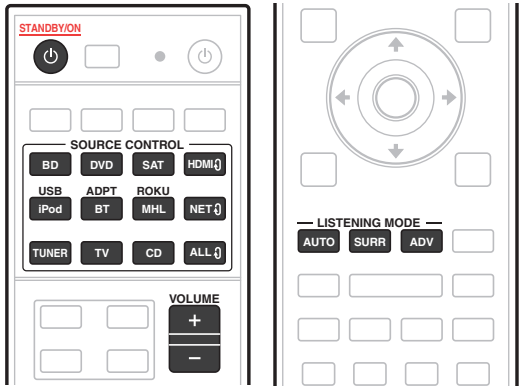

1 Switch on your system components and receiver.

Start by switching on the playback component (for example a DVD player), your TV and subwoofer (if you have one), then the receiver (press ⏻ **STANDBY/ON**).
Make sure that the TV's video input is set to this receiver.

2 Select the input function you want to play.

You can use the input function buttons on the remote control or the front panel **INPUT SELECTOR** dial.

- As necessary, select the type of audio input signal (page 75).

3 Press AUTO (AUTO SURR/ALC/STREAM DIRECT) to select 'AUTO SURROUND' and start playback of the source.

For such sound sources as Dolby TrueHD and DTS-HD, the surround sound is played. With stereo sound, the sound is played from the left and right front speakers with the default listening mode.
To play a stereo sound source in multichannel, press **SURR** or **ADV** to select your favorite listening mode. (Example: Press **SURR** several times to select **EXT.STEREO**.)

- You may need to check the digital audio output settings on your DVD player or digital satellite receiver. It should be set to output Dolby Digital, DTS and 88.2 kHz / 96 kHz PCM (2 channel) audio, and if there is an MPEG audio option, set this to convert the MPEG audio to PCM.
- See also Listening to your system on page 72 for information on different ways of listening to sources.

It is possible to check on the front panel display whether or not multi-channel playback is being performed properly. For details, see Auto Surround, ALC and Stream Direct with different input signal formats on page 139.
When multi-channel speakers (more than the two front left and right channels) are connected, straight decoding is performed, so the input signal's format name (for example, **TrueHD**, **DTS-HD MSTR** or **DTS-HD HI RES**) is displayed.
If the display does not correspond to the input signal and listening mode, check the connections and settings.

4 Use the VOLUME +/– to adjust the volume level.

Turn down the volume of your TV so that all sound is coming from the speakers connected to this receiver.

Note

Depending on the input to be played, the playback operation can in some cases be performed using the on-screen display.
With factory default settings, the on-screen display will be output from all HDMI output terminals and displayed on any TV connected via HDMI cable. You can change where the screen is output in the **MAIN/HDZONE** (page 117) and HDMI output (page 94) settings.

Turning off the sound

Mutes the sound or restores the sound if it has been muted (adjusting the volume also restores the sound).

- **Press MUTE.**

Playing a source with HDMI connection

- **Use ALL to select the input function connected to the receiver's HDMI input terminals.**

You can also perform the same operation by using the **INPUT SELECTOR** dial on the front panel or by pressing **HDMI** on the remote control repeatedly.

- Set the **HDMI** parameter in Setting the Audio options on page 89 to **THROUGH** if you want to hear HDMI audio output from your TV (no sound will be heard from this receiver).
- If the video signal does not appear on your TV, try adjusting the resolution settings on your component or display. Note that some components (such as video game units) have resolutions that may not be converted. In this case, use an analog video connection.

Selecting the multichannel analog inputs

SC-99 only

If you have connected a decoder or a DVD player as above, you must select the analog multichannel inputs for surround sound playback.

- When the center or surround speakers are bi-amped, no sound is produced even when **MULTI CH IN** is selected. (Check Determining the speakers' application on page 20 and Bi-amping your speakers on page 26.)
- When playback from the multichannel inputs is selected, only the volume and channel levels can be set.
- With **MULTI CH IN** inputs, it is possible to play pictures simultaneously. For details, see Multi Channel Input Setup on page 118.

1 Make sure you have set the playback source to the proper output setting.

For example, you might need to set your DVD player to output multichannel analog audio.

2 Use ALL to select MULTI CH IN.

You can also use the **INPUT SELECTOR** dial on the front panel.

- Depending on the DVD player you're using, the analog output level of the subwoofer channel may be too low. In this case, the output level of the subwoofer can be increased by 10 dB in the **Multi Ch In Setup** in **Other Setup**. For details, see Multi Channel Input Setup on page 118.

Playing an iPod

This receiver has the **iPod/iPhone** terminal that will allow you to control playback of audio content from your iPod using the controls of this receiver.
Here we describe the procedure for playback on an iPod. For playback on a USB device, see Playing a USB device on page 66.

Important

- USB works with iPhone 6 Plus, iPhone 6, iPhone 5s, iPhone 5c, iPhone 5, iPhone 4s, iPhone 4, iPhone 3GS, iPod touch (4th through 5th generation) and iPod nano (4th through 7th generation).
  However, some of the functions may be restricted for some models.
- This receiver has been developed and tested for the software version of iPod/iPhone indicated on the website of Pioneer.
  http://pioneer.jp/homeav/support/ios/na/
- Installing software versions other than indicated on the website of Pioneer to your iPod/iPhone may result in incompatibility with this receiver.
- iPod and iPhone are licensed for reproduction of non-copyrighted materials or materials the user is legally permitted to reproduce.
- Features such as the equalizer cannot be controlled using this receiver, and we recommend switching the equalizer off before connecting.
- Pioneer cannot under any circumstances accept responsibility for any direct or indirect loss arising from any inconvenience or loss of recorded material resulting from the iPod failure.
- When listening to a track on the iPod in the main zone, it is possible to control the sub zone, but not to listen to a different track in the sub zone from the one playing in the main zone.

1 Press ⏻ STANDBY/ON to switch on the receiver and your TV.

See Connecting an iPod on page 47.
About one minute is required between turning the power on and completion of startup.

- It is also possible to operate the iPod on the iPod itself, without using the TV screen. For details, see Switching the iPod controls on page 65.

2 Press iPod USB on the remote control to switch the receiver to the iPod/USB.

When the display shows the names of folders and files, you're ready to play music from the iPod.

Playing back audio files stored on an iPod

To navigate songs on your iPod, you can take advantage of the GUI screen of your TV connected to this receiver. You can also control all operations for music in the front panel display of this receiver.

- Note that characters that cannot be displayed on this receiver are displayed as #.
- This feature is not available for photos on your iPod.

Finding what you want to play

When your iPod is connected to this receiver, you can browse songs stored on your iPod by playlist, artist name, album name, song name, genre or composer, similar to using your iPod directly.

1 Use ⬆/⬇ to select a category, then press ENTER to browse that category.

- When ⏮ or ⏭ is pressed at the list screen, the page switches.
- To return to the previous level any time, press **RETURN**.

2 Use ⬆/⬇ to browse the selected category (e.g., albums).

- Use ⬅/➡ to move to previous/next levels.

3 Continue browsing until you arrive at what you want to play, then press ▶ to start playback.

- On the playback screen, pressing **RETURN** displays a list screen. To return to the playback screen, press **DISP**.

Note

You can play all of the songs in a particular category by selecting the **All** item at the top of each category list. For example, you can play all the songs by a particular artist.

Basic playback controls

This receiver's remote control buttons can be used for basic playback of files stored on an iPod.

- Press **iPod USB** to switch the remote control to the iPod/USB operation mode.

Switching the iPod controls

You can switch over the iPod controls between the iPod and the receiver.

1 Press HOME MENU to switch the iPod controls.

This enables operation and display on your iPod, and this receiver's remote control and GUI screen become inactive.

2 Press HOME MENU again to switch back to the receiver controls.

Note

Change the receiver's input to the iPod in one action by pressing the **iPod iPhone DIRECT CONTROL** button on the front panel to enable iPod operations on the iPod.

Playing a USB device

It is possible to play files using the USB interface on the front of this receiver.

- Compatible USB devices include external magnetic hard drives, portable flash memory drives (particularly key drives) and digital audio players (MP3 players) of format FAT16/32.
- Pioneer cannot guarantee compatibility (operation and/or bus power) with all USB mass storage devices and assumes no responsibility for any loss of data that may occur when connected to this receiver.

1 Press ⏻ STANDBY/ON to switch on the receiver and your TV.

See Connecting a USB device on page 48.

About one minute is required between turning the power on and completion of startup.

- Make sure the receiver is in standby when disconnecting the USB device.

2 Press iPod USB on the remote control to switch the receiver to the iPod/USB.

When the display shows the names of folders and files, you're ready to play from the USB device.

Note

If an **Over Current** message lights in the display, the power requirements of the USB device are too high for this receiver. Try following the points below:

- Switch the receiver off, then on again.
- Reconnect the USB device with the receiver switched off.
- Use a dedicated AC adapter (supplied with the device) for USB power.

If this doesn't remedy the problem, it is likely your USB device is incompatible.

Playing back audio files stored on a USB memory device

The maximum number of levels that you can select in Step 2 (below) is 9.

- Note that non-Roman characters in the playlist are displayed as #.

1 Use ⬆/⬇ to select a folder, then press ENTER to browse that folder.

- To return to the previous level any time, press **RETURN**.

2 Continue browsing until you arrive at what you want to play, then press ► to start playback.

- Copyrighted audio files cannot be played back on this receiver.
- DRM-protected audio files cannot be played back on this receiver.
- On the playback screen, pressing **RETURN** displays a list screen. To return to the playback screen, press **DISP**.

Basic playback controls

This receiver's remote control buttons can be used for basic playback of files stored on USB memory devices.

- Press **iPod USB** to switch the remote control to the iPod/USB operation mode.

Playing back photo files stored on a USB memory device

- Photo files cannot be played in the sub zone.

1 Use ⬆/⬇ to select a folder, then press ENTER to browse that folder.

- For high resolution files, some time may be required for the photo to appear.
- To return to the previous level any time, press **RETURN**.

2 Continue browsing until you arrive at what you want to play, then press ENTER to start playback.

The selected content is displayed in full screen and a slideshow starts.

Basic playback controls

Button(s)	What it does
ENTER, ►	Starts displaying a photo and playing a slideshow.
■	Stops the player and returns to the previous menu.

Tip

Slide shows of photo files can be played while listening to music files by returning to the folder/file list display while playing a music file on a USB device and then playing the photo files. At that time, select music files with a sampling frequency of 48 kHz or less.

About playable file formats

The USB function of this receiver supports the following file formats. Note that some file formats are not available for playback although they are listed as playable file formats.

- For MP3, WAV, AAC, FLAC, AIFF, Apple Lossless, and DSD files, gapless play will be performed when a music file with identical format, sampling frequency, number of quantization bits, and number of channels is continuously played.
  —When AAC or MP3 format is used, sound is reproduced with the minimum gap. If you are conscious about gaps, use WAV or FLAC files.

Music files

Category	Extension	Stream		
MP3 <a>	.mp3	MPEG-1 Audio Layer-3	Sampling frequency	32 kHz, 44.1 kHz, 48 kHz
			Quantization bitrate	16 bit
			Channel	2 ch
			Bitrate	8 kbps to 320 kbps
			VBR/CBR	Supported/Supported
WAV	wav	LPCM	Sampling frequency <b>	32 kHz, 44.1 kHz, 48 kHz, 88 2 kHz, 96 kHz, 176.4 kHz, 192 kHz
			Quantization bitrate	16 bit, 24 bit
			Channel	2 ch, 5.0 ch, 5.1 ch
WMA	.wma	WMA2/7/8/9 <c>	Sampling frequency	32 kHz, 44.1 kHz, 48 kHz
			Quantization bitrate	16 bit
			Channel	2 ch
			Bitrate	5 kbps to 320 kbps
			VBR/CBR	Supported/Supported
AAC	.m4a .aac .3gp .3g2	MPEG-4 AAC LC MPEG-4 HE AAC	Sampling frequency	32 kHz, 44.1 kHz, 48 kHz
			Quantization bitrate	16 bit
			Channel	2 ch
			Bitrate	16 kbps to 320 kbps
			VBR/CBR	Supported/Supported
Apple Lossless	.m4a .mp4	Apple Lossless	Sampling frequency	32 kHz, 44.1 kHz, 48 kHz, 88 2 kHz, 96 kHz, 176.4 kHz, 192 kHz
			Quantization bitrate	16 bit, 24 bit
			Channel	2 ch
FLAC <d>	.flac	FLAC	Sampling frequency <e>	32 kHz, 44.1 kHz, 48 kHz, 88 2 kHz, 96 kHz, 176.4 kHz, 192 kHz
			Quantization bitrate	16 bit, 24 bit
			Channel	2 ch, 5.0 ch, 5.1 ch
AIFF	.aiff aif	AIFF	Sampling frequency	32 kHz, 44.1 kHz, 48 kHz, 88 2 kHz, 96 kHz, 176.4 kHz, 192 kHz
			Quantization bitrate	16 bit, 24 bit
			Channel	2 ch
DSD <f>	.dff .dsf	DSDIFF DSF	Sampling frequency	2.8224 MHz, 5.6448 MHz
			Quantization bitrate	1 bit
			Channel	2 ch

a *"MPEG Layer-3 audio decoding technology licensed from Fraunhofer IIS and Thomson multimedia."*
b 32 kHz supports 2-channel audio sources only.
c Files encoded using Windows Media Codec 9 may be playable but some parts of the specification are not supported; specifically, Pro, Lossless, Voice.
d Uncompressed FLAC files are not supported. Pioneer does not guarantee playback.
e 32 kHz, 176 4 kHz and 192 kHz support 2-channel audio sources only.
f DSD files cannot be played in the sub zone.

Photo files

Category	Extension	Format
JPEG	.jpg	Meeting the following conditions: • Baseline JPEG format • Y:Cb:Cr – 4 2 2

Playing an MHL-compatible device

MHL (Mobile High-definition Link) is an interface standard for transmitting digital signals with mobile devices. MHL can carry high quality multi-channel audio data and 3D/Full-HD video formats.
The MHL-compatible device's video signals are output from the TV connected to the receiver, the audio signals are output from the speakers connected to the receiver or TV.

1 Press ⏻ STANDBY/ON to switch on the receiver and your TV.

For connection of MHL standard-compatible equipment, refer to page 48.

2 Press MHL on the remote control to switch the receiver to the MHL.

3 Select and play the desired contents on the MHL-compatible device.

Notes

- MHL-compatible devices can be operated with the receiver's remote control by pressing the remote control's **MHL** button, but depending on the MHL-compatible device being used, some buttons may not be operable.
- To playback from a MHL-compatible device connected to the receiver on a TV that is also connected to the receiver, the power to the receiver must be turned on.

Playing music from a computer

SC-99 only

Use this function to play digital audio input to the unit's rear panel **USB-DAC IN** terminal.

Important

- When switching this unit's input from **USB-DAC** to another input, first quit the computer's music playback application, then switch the input.
- The exclusive driver must be installed on the computer in order to play high sound quality files of over 48 kHz/24 bits and DSD files.
  The driver software is provided on the included CD-ROM.

1 Press ⏻ STANDBY/ON to switch on the receiver and your computer.

See Using a USB cable to connect to a computer on page 48.

2 Use ALL⇕ to select USB-DAC.

You can also use the **INPUT SELECTOR** dial on the front panel.

3 Begin playback on the computer.

Notes

- Output from the **OPTICAL OUT** terminal is not supported during **USB-DAC IN** input.
- In addition to LPCM, DSD with DoP transmission is also supported. The supported format is 2 8 MHz, 1 bit. Only two channels, including LPCM, are supported.
- Playback cannot be controlled from this unit during use of this function; use your computer to control playback.
- When disconnecting the USB cable, always stop playback on the computer first.
- Sound may not be produced if your computer does not support USB 2.0 HS.
- This unit does not support use of a USB hub. Always use a USB cable to connect the unit directly to the computer.

About playable file formats

The USB-DAC function of this receiver supports the following file formats. Note that some file formats are not available for playback although they are listed as playable file formats.

Category		Stream	
LPCM	LPCM	Sampling frequency	44.1 kHz, 48 kHz, 88.2 kHz, 96 kHz, 176 4 kHz, 192 kHz
		Quantization bitrate	16 bit, 24 bit, 32 bit
		Channel	2 ch
DSD	DSDIFF DSF	Sampling frequency	2.8 MHz
		Quantization bitrate	1 bit
		Channel	2 ch

- With DSD playback, only the DoP standard is supported. A PC player supporting the DoP standard is required. Only native playback is supported for DSD.
- When **Speaker System** is set to **7.2.2/7.2ch + SP-B** or **5.2ch + SP-B Bi-Amp**, the audio signals of DSD files are not output to Speaker B.
- When **USB-DAC** is selected in the sub zone, DSD files and PCM signals with a sampling frequency of 176 4 kHz cannot be played.
- When playing PCM signals at sampling frequency of 176.4 kHz, the listening mode becomes **PURE DIRECT**. You will be unable to select another listening mode.

Listening to the radio

The following steps show you how to tune in to FM and AM radio broadcasts using the automatic (search) and manual (step) tuning functions. If you already know the frequency of the station you want, see Tuning directly to a station below. Once you are tuned to a station you can memorize the frequency for recall later-see Saving station presets on page 69 for more on how to do this.

1 Press TUNER to select the tuner.

2 Use BAND to change the band (FM or AM), if necessary.

3 Tune to a station.

There are three ways to do this:

- **Automatic tuning** – To search for stations in the currently selected band, press and hold **TUNE +/–** for about a second. The receiver will start searching for the next station, stopping when it has found one. Repeat to search for other stations.
- **Manual tuning** – To change the frequency one step at a time, press **TUNE +/–**.
- **High speed tuning** – Press and hold **TUNE +/–** for high speed tuning. Release the button at the frequency you want.

Improving FM sound

If the **TUNED** or **STEREO** indicator doesn't light when tuning to an FM station because the signal is weak, press **MPX** to switch the receiver into mono reception mode. This should improve the sound quality and allow you to enjoy the broadcast.

Using the noise cut mode

The two noise cut modes can be used when receiving AM broadcasts. Press **MPX** to select the noise cut mode (1 to 2).

Tuning directly to a station

1 Press TUNER to select the tuner.

2 Use BAND to change the band (FM or AM), if necessary.

3 Press D.ACCESS (Direct Access).

4 Use the number buttons to enter the frequency of the radio station.

For example, to tune to **106.00** (FM), press **1**, **0**, **6**, **0**, **0**.
If you make a mistake halfway through, press **D.ACCESS** twice to cancel the frequency and start over.

Saving station presets

If you often listen to a particular radio station, it's convenient to have the receiver store the frequency for easy recall whenever you want to listen to that station. This saves the effort of manually tuning in each time. This receiver can memorize up to 63 stations, stored in seven banks, or classes (A to G) of 9 stations each.

1 Tune to a station you want to memorize.

See Listening to the radio on page 68 for more on this.

2 Press TOOLS (TUNER EDIT).

The display shows **PRESET MEMORY**, then a blinking memory class.

3 Press CLASS to select one of the seven classes, then press PRESET +/– to select the station preset you want.

You can also use the number buttons to select a station preset.

4 Press ENTER.

After pressing **ENTER**, the preset class and number stop blinking and the receiver stores the station.

Listening to station presets

1 Press TUNER to select the tuner.

2 Press CLASS to select the class in which the station is stored.

Press repeatedly to cycle through classes A to G.

3 Press PRESET +/– to select the station preset you want.

- You can also use the number buttons on the remote control to recall the station preset.

Naming station presets

For easier identification, you can name your station presets.

1 Choose the station preset you want to name.

See Listening to station presets on page 69 for how to do this.

2 Press TOOLS (TUNER EDIT).

The display shows **PRESET NAME**, then a blinking cursor at the first character position.

3 Input the name you want.

Use ⬆/⬇ (or **TUNE** ⬆/⬇ of front panel) to select a character, ⬅/➡ (or **PRESET** ⬅/➡ of front panel) to set the position, and **ENTER** to confirm your selection.

Notes

- To erase a station name, simply repeat steps 1 to 3 and input eight spaces instead of a name.
- Once you have named a station preset, you can press **DISP** when listening to a station to switch the display between name and frequency.

Music playback using *Bluetooth* wireless technology

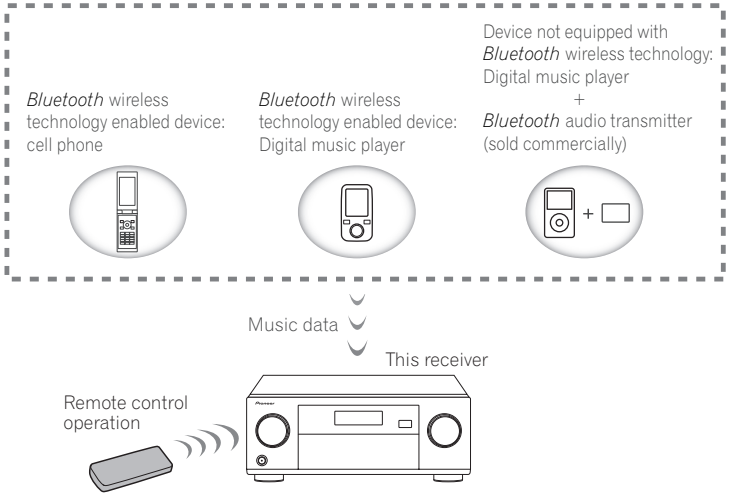

The unit is capable of playing back music stored on *Bluetooth* capable devices (cell phones, digital music players etc.) wirelessly. You can also use a *Bluetooth* audio transmitter (sold separately) to enjoy music from devices that do not have *Bluetooth* functionality. Please refer to the user's manual for your *Bluetooth* capable device for more details.

Notes

- The *Bluetooth* wireless technology enabled device must support A2DP profiles.
- Pioneer does not guarantee proper connection and operation of this unit with all wireless technology enabled devices.

Remote control operation

The remote control supplied with this unit allows you to play and stop media, and perform other operations.

Notes

- The *Bluetooth* wireless technology enabled device must support AVRCP profiles.
- Remote control operations cannot be guaranteed for all *Bluetooth* wireless technology enabled devices.

Pairing with the unit (Initial registration)

In order for the unit to playback music stored on a *Bluetooth* capable device, pairing must first be performed. Pairing should be performed when first using the unit with the *Bluetooth* capable device, or when the pairing data on the device has been erased for any reason. Pairing is a step required to allow communication using *Bluetooth* wireless technology to be carried out.

- Pairing is performed the first time that you use the unit and the *Bluetooth* capable device together.
- In order to allow communication using *Bluetooth* wireless technology to take place, pairing must be performed on both the unit and the *Bluetooth* capable device.
- After pressing the **BT** and switching to **BT AUDIO** input, perform the pairing procedure on the *Bluetooth* capable device. If pairing has been performed correctly, you will not need to perform the pairing procedures for the unit as shown below.

Please refer to the user's manual for your *Bluetooth* capable device for more details.

1 Press BT and after choosing the input for BT AUDIO, perform operations 2 and 3 within 5 minutes.

2 Turn on the power to the *Bluetooth* capable device that you wish to pair with, and perform pairing procedure on it.

Pairing will start.

- Place the *Bluetooth* capable device close to the unit.
- Please refer to the user's manual for your *Bluetooth* capable device for details on when pairing can be performed and the procedures required for pairing.
- The name of this receiver indicated on the equipment that has the *Bluetooth* functionality is "SC-99 XXXXXX (equipment unique symbol)" or "SC-97 XXXXXX (equipment unique symbol)".
- When PIN code entry is requested, enter **0000**. (This unit does not accept any PIN code setting other than **0000**.)

3 Confirm on the *Bluetooth* capable device that pairing has been completed.

If pairing with the *Bluetooth* capable device has been completed correctly, **CONNECTED** will be displayed on the front panel of the unit.

Listen to music on the unit from a *Bluetooth* capable device

1 A *Bluetooth* connection will be created between the *Bluetooth* capable device and the unit.

Procedures for connecting to the unit should be performed from the *Bluetooth* capable device.

- Please refer to the user's manual for your *Bluetooth* capable device for details of the connection procedures.

2 Playback music from the *Bluetooth* capable device.

This receiver's remote control buttons can be used for basic playback of files stored on *Bluetooth* wireless technology devices.

- When the **Network Standby** and **Bluetooth Setup** for **Network, Bluetooth** settings are set as **ON**, the main power of this receiver will automatically be on by playing the equipment using the *Bluetooth* function. However, when network communication becomes disconnected, it will switch from the network standby mode to normal standby mode. In such case, turn the power on with the remote controller and play.
- When play is started on the equipment with the *Bluetooth* function, the zone input set at **Play ZONE Setup** will automatically switch to **BT AUDIO**.
- Depending on the *Bluetooth* wireless technology device you use, operation may differ from what is shown in the remote control buttons.

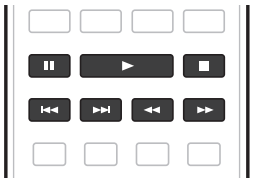

3 While listening to a source, set the remote control to the receiver operation mode, then press ADV repeatedly to select SOUND RETRIEVER AIR.

Notes

- With this receiver, when an iPod is connected or disconnected while the music of a *Bluetooth* wireless technology device is playing, the connection with the *Bluetooth* wireless technology device may be canceled.
- The **SOUND RETRIEVER AIR** listening mode can only be selected when the **BT AUDIO** input.
- Playback screen information may not appear properly on this receiver depending on the *Bluetooth* enabled device being used.

Radio wave caution

This unit uses a 2.4 GHz radio wave frequency, which is a band used by other wireless systems (see list below). To prevent noise or interrupted communication, do not use this unit nearby such devices, or make sure these devices are switched off during use.

- Cordless phones
- Cordless facsimiles
- Microwave ovens
- Wireless LAN devices (IEEE802.11b/g)
- Wireless AV equipment
- Wireless controllers for game systems
- Microwave-based health aids
- Some baby monitors

Other, less common, equipment that may operate on the same frequency:

- Anti-theft systems
- Amateur radio stations (HAM)
- Warehouse logistic management systems
- Discrimination systems for train or emergency vehicles

Notes

- In the event noise appears in your television image, there is the possibility that a *Bluetooth* wireless technology enabled device or this unit (including products supported by this unit) are causing signal interference with the antenna input connector of your television, video, satellite tuner, etc. In this event, increase the distance between the antenna input connector and the *Bluetooth* wireless technology enabled device or this unit (including products supported by this unit).
- If there is something obstructing the path between this unit (including devices supported by this unit) and the device equipped with *Bluetooth* wireless technology (such as a metal door, concrete wall, or insulation containing tinfoil), you may need to change the location of your system to prevent signal noise and interruptions.

Scope of operation

Use of this unit is limited to home use. (Transmission distances may be reduced depending on communication environment).

In the following locations, poor condition or inability to receive radio waves may cause the audio to be interrupted or stopped:

- In reinforced concrete buildings or steel framed or iron-framed buildings.
- Near large metallic furniture.
- In a crowd of people or near a building or obstacle.
- In a location exposed to the magnetic field, static electricity or radio wave interference from radio communication equipment using the same frequency band (2.4 GHz) as this unit, such as a 2.4 GHz wireless LAN device (IEEE802.11b/g) or microwave oven.
- If you live in a heavily populated residential area (apartment, townhouse, etc.) and if your neighbor's microwave is placed near your system, you may experience radio wave interference. If this occurs, move your unit to a different place. When the microwave is not in use, there will be no radio wave interference.

Radio wave reflections

The radio waves received by this unit include the radio wave coming directly from the device equipped with *Bluetooth* wireless technology (direct wave) and waves coming from various directions due to reflections by walls, furniture and building (reflected waves). The reflected waves (due to obstacles and reflecting objects) further produce a variety of reflected waves as well as variation in reception condition depending on locations. If the audio cannot be received properly due to this phenomenon, try moving the location of the device equipped with *Bluetooth* wireless technology a little. Also note that audio may be interrupted due to the reflected waves when a person crosses or approaches the space between this unit and the device equipped with *Bluetooth* wireless technology.

Precautions regarding connections to products supported by this unit

- Complete connections for all devices supported by this unit, including all audio cords and power cables before connecting them to this unit.
- After completing connections to this unit, check the audio and power cables to confirm that they not twisted together.
- When disconnecting this unit, confirm that you have sufficient working space in the surrounding area.
- When changing connections of audio or other cables for products supported by this unit, confirm that you have sufficient working space in the surrounding area.

Listening to your system

Enjoying various types of playback using the listening modes 73
Selecting MCACC presets 75
Choosing the input signal 75
Better sound using Phase Control 75
Better sound using Phase Control and Full Band Phase Control 76

Enjoying various types of playback using the listening modes

Using this receiver, you can listen to any source in surround sound. However, the options available will depend on your speaker setup and the type of source you're listening to.
To play with surround sound, check "Standard surround sound" or "Using the Advanced surround effects" below and select the desired mode.
To play with the optimum mode for the input signal, see "Auto playback" or "Using Stream Direct". (The sound is played in stereo when 2-channel signals are input, in surround when multi-channel signals are input.)

Important

- The listening modes and many features described in this section may not be available depending on the current source, settings and status of the receiver.

Auto playback

There are many ways to listen back to sources using this receiver, but the simplest, most direct listening option is the Auto Surround feature. The receiver automatically detects what kind of source you're playing and selects multichannel or stereo playback as necessary.

- **While listening to a source, press AUTO (AUTO SURR/ALC/STREAM DIRECT) for auto playback of a source.**

AUTO SURROUND shows briefly in the display before showing the decoding or playback format. Check the digital format indicators in the front panel display to see how the source is being processed.

- If the source is Dolby Digital, DTS, or Dolby Surround encoded, the proper decoding format will automatically be selected and shows in the display.
- When listening to the **BT AUDIO** input, the **SOUND RETRIEVER AIR** feature is selected automatically.

ALC – In the Auto level control (**ALC**) mode, this receiver equalizes playback sound levels.
Also, the low and high frequency sounds, dialogs, surround effects, etc., that are difficult to hear when the volume is low are adjusted to be optimal for the volume level. This mode is particularly optimum when listening at night.
OPTIMUM SURR – In the Optimum Surround mode, this receiver automatically optimizes sound balance in each scene based on actually set volume. The sound balancer controls three major theater sound elements dialogue, bass and surround with original algorithm.

Note

When **ALC** is selected, the effect level can be adjusted using the **EFFECT** parameter in Setting the Audio options on page 89.

Standard surround sound

The following modes provide basic surround sound for stereo and multichannel sources.

- **While listening to a source, press SURR (STANDARD SURROUND).**

If necessary, press repeatedly to select a listening mode.

- If the source is Dolby Digital, DTS, or Dolby Surround encoded, the proper decoding format will automatically be selected and shows in the display.

With two channel sources, you can select from:

- **EXT.STEREO** – Gives multichannel sound to a stereo source, using all of your speakers
- **Dolby Surround** – Dolby Surround is played with a maximum of 11.1 ch including surround back and top forward + top backward channels using up-mix technology that can expand sound to speakers arranged in three-dimensions, in lieu of the conventional Pro Logic II, Pro Logix IIx, and Pro Logic IIz.
- **Neo:X CINEMA** – Up to 11.1 channel sound (including surround back, front height, and front wide), especially suited to movie sources
- **Neo:X MUSIC** – Up to 11.1 channel sound (including surround back, front height, and front wide), especially suited to music sources
- **Neo:X GAME** – Up to 11.1 channel sound (including surround back, front height, and front wide), especially suited to video games
- **STEREO** – The audio is heard with your sound settings and you can still use the audio options.

With multichannel sources, if you have connected surround back, top forward, top middle, top backward, front height or front wide speakers, you can select (according to format):

- **EXT.STEREO** – See above
- **Dolby Surround** – See above
- **STEREO** – See above
- **DTS Neo:X** – Allows you to hear 11.1 channel playback with DTS encoded sources
- **DTS-ES Matrix** or **DTS-ES Discrete** – Allows you to hear 6.1 channel playback with DTS-ES encoded sources

Notes

- When listening to 2-channel audio in **Neo:X CINEMA**, **Neo:X MUSIC**, or **Neo:X GAME** mode, **C.GAIN** can be adjusted (page 89).
- When listening through headphones, you can select **STEREO** mode only.
- *SC-99 only:* When playing DSD sources via **USB-DAC**, the **NATIVE DSD** mode is set. Other modes cannot be selected.
- When **Dolby Surround** is selected, **C.SPREAD** can be adjusted (page 89).
- When **Dolby Surround** is selected, audio is not output from the front wide speaker and surround back speaker when it is the only one connected (set).
- When **Neo:X CINEMA**, **Neo:X MUSIC** or **Neo:X GAME** is selected, audio is not output from the top middle speaker, top forward speaker, and top backward speaker.

Using the Advanced surround effects

The Advanced surround effects can be used for a variety of additional surround sound effects. Most Advanced Surround modes are designed to be used with film soundtracks, but some modes are also suited for music sources. Try different settings with various soundtracks to see which you like.

- **Press ADV (ADVANCED SURROUND) repeatedly to select a listening mode.**

- **ACTION** – Designed for action movies with dynamic soundtracks
- **DRAMA** – Designed for movies with lots of dialog
- **ADVANCED GAME** – Suitable for video games
- **SPORTS** – Suitable for sports programs
- **CLASSICAL** – Gives a large concert hall-type sound
- **ROCK/POP** – Creates a live concert sound for rock and/or pop music
- **F.S.SURROUND** – Use to provide a rich surround sound effect directed to the center of where the front left and right speakers sound projection area converges.

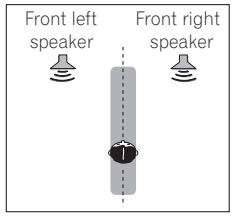

- **SOUND RETRIEVER AIR** – Suitable for listening to the sound from a *Bluetooth* wireless technology device. The **SOUND RETRIEVER AIR** listening mode can only be selected when the **BT AUDIO** input.
- **PHONES SURR** – When listening through headphones, you can still get the effect of overall surround.
- **ECO MODE 1** – Select this to play for example music that has a high audio level with a lower power consumption than usual.
- **ECO MODE 2** – Select this to play movies, etc., with a high ratio of low volume scenes and high volume scenes (a large dynamic ratio) with a lower power consumption than usual. This mode provides greater power savings than **ECO MODE 1**.

Notes

- The Front Stage Surround Advance (**F.S.SURROUND**) function allows you to create natural surround sound effects using just the front speakers and the subwoofer.
- When **ECO MODE 1** or **ECO MODE 2** is selected, the front panel's display lights with the dimmest brightness.
- Since **ECO MODE 1** and **ECO MODE 2** reduce the power consumption, the speakers are switched in function of the number of input channels. Because of this, a speaker switching sound (clicking sound) may be produced when the number of input channels is switched. If this bothers you, switch to a different listening mode.
- When using headphones, **SOUND RETRIEVER AIR** (only with the **BT AUDIO** input), **PHONES SURR**, **ECO MODE 1** and **ECO MODE 2** can be selected.

Using Stream Direct

Use the Stream Direct modes when you want to hear the truest possible reproduction of a source. All unnecessary signal processing is bypassed, and you're left with the pure analog or digital sound source.
Processing differs depending on the input signal and whether or not surround back speakers are connected. For details, see Auto Surround, ALC and Stream Direct with different input signal formats on page 139.

- **While listening to a source, press AUTO (AUTO SURR/ALC/STREAM DIRECT) to select the mode you want.**

Check the digital format indicators in the front panel display to see how the source is being processed.

- **AUTO SURROUND** – See Auto playback on page 73.
- **ALC** – Listening in Auto level control mode (page 73).
  —When **ALC** is selected, the effect level can be adjusted using the **EFFECT** parameter in Setting the Audio options on page 89.
- **DIRECT** – Plays back sound from the source with the least modification next to **PURE DIRECT**. With **DIRECT**, the only modifications added to **PURE DIRECT** playback are calibration of the sound field by the MCACC system and the Phase Control effect.
- **PURE DIRECT** – Plays back unmodified sound from source with only minimal digital treatment.
- **OPTIMUM SURR** – Listening in Optimum Surround mode (page 73).

Note

When listening through headphones, you can select **ALC**, **OPTIMUM SURR** or **PURE DIRECT** mode only.

About Dolby Atmos

This AV receiver supports the latest Dolby Atmos surround sound system. Dolby Atmos is a new technology in which, through real time calculation of audio data and meta data (position and time information) included in the audio signal, a surround sound space is achieved irrespective of the speaker layout and number of speakers.
Dolby Atmos contents are required to enjoy Dolby Atmos. For Blu-ray discs with Dolby Atmos, Dolby Atmos can be played by connecting most conventional Blu-ray discs with this receiver using HDMI.
In addition, the following connection and settings are necessary to play Dolby Atmos.

- Any one of top middle, top forward + top backward, surround back, front height, or front-wide speakers must be connected
- Press the **AUTO** button, and select any one of the **AUTO SURROUND**, **DIRECT**, or **PURE DIRECT** listening modes
- Settings for **RENDER** must be **OBJECT** (page 89).

For details on Dolby Atmos, see page 142.

Note

When playing back Dolby Atmos content, the program format indicator does not light (page 15).
'**Dolby Atmos**' is displayed in the display of this receiver.

Selecting MCACC presets

- Default setting: **MEMORY 1**

If you have calibrated your system for different listening positions, you can switch between settings to suit the kind of source you're listening to and where you're sitting (for example, watching movies from a sofa, or playing a video game close to the TV).

1 Press MAIN RECEIVER to switch the remote control to the receiver operation mode, and then press AUDIO P..

2 Use ⬆/⬇ to select 'MCACC'.

An indicator such as ◀ **M1. MEMORY 1** ▶ is displayed in the front panel display.

3 Use ⬅/➡ to select the setting.

Press repeatedly to select one of the six MCACC presets. See Data Management on page 110 to check and manage your current settings.

- These settings have no effect when headphones are connected.
- You can also press ⬅/➡ to select the MCACC preset.

Choosing the input signal

On this receiver, it is possible to switch the input signals for the different inputs as described below.

- This receiver can only play back Dolby Digital, PCM (32 kHz to 192 kHz) and DTS (including DTS 96/24) digital signal formats. The compatible signals via the HDMI terminals are: Dolby Digital, DTS, PCM (32 kHz to 192 kHz), Dolby TrueHD, Dolby Digital Plus, DTS-EXPRESS, DTS-HD Master Audio and SACD.
- You may get digital noise when an LD, CD, DVD or BD player compatible with DTS is playing an analog signal. To prevent noise, make the proper digital connections (page 36) and set the signal input to **DIGITAL**.
- Some DVD players don't output DTS signals. For more details, refer to the instruction manual supplied with your DVD player.

1 Press MAIN RECEIVER to switch the remote control to the receiver operation mode, and then press AUDIO P..

2 Use ⬆/⬇ to select 'SIGSEL'.

3 Use ⬅/➡ to select the input signal corresponding to the source component.

Each press cycles through the options as follows:

- **AUTO** – The receiver selects the first available signal in the following order: **HDMI**; **DIGITAL**; **ANALOG**.
- **ANALOG** – Selects an analog signal.
- **DIGITAL** – Select an optical or coaxial digital input signal. '**DIGITL**' is displayed on the front panel display.
- **HDMI** – Selects an HDMI signal.
  — When the **HDMI** audio output parameter is set to **THROUGH**, the sound will be heard through your TV, not from this receiver.

When set to **DIGITAL**, **HDMI** or **AUTO** (only selected **DIGITAL** or **HDMI**), the indicators light according to the signal being decoded (see Display on page 15).

Better sound using Phase Control

This receiver's Phase Control feature uses phase correction measures to make sure your sound source arrives at the listening position in phase, preventing unwanted distortion and/or coloring of the sound.
Phase Control technology provides coherent sound reproduction through the use of phase matching for an optimal sound image. The default setting is on and we recommend leaving Phase Control switched on for all sound sources.

1 Press MAIN RECEIVER to switch the remote control to the receiver operation mode, and then press AUDIO P..

2 Use ⬆/⬇ to select 'PHASE'.

3 Use ⬅/➡ to switch on phase correction.

The **PHASE CONTROL** indicator on the front panel lights.

Notes

- Phase matching is a very important factor in achieving proper sound reproduction. If two waveforms are 'in phase', they crest and trough together, resulting in increased amplitude, clarity and presence of the sound signal. If a crest of a wave meets a trough, then the sound will be 'out of phase' and an unreliable sound image will be produced.
- For discs created with standards other than Phase Control, the LFE channel is delayed upon recording in the first place. Phase Control Plus function corrects for phase shifting on such discs. For instructions on setting the Phase Control Plus, see Setting the Audio options on page 89.
- If your subwoofer has a phase control switch, set it to the plus (+) sign (or 0°). However, the effect you can actually feel when **PHASE CONTROL** is set to **ON** on this receiver depends on the type of your subwoofer. Set your subwoofer to maximize the effect. It is also recommended you try changing the orientation or the place of your subwoofer.
- Set the built-in lowpass filter switch of your subwoofer to off. If this cannot be done on your subwoofer, set the cutoff frequency to a higher value.
- If the speaker distance is not properly set, you may not have a maximized **PHASE CONTROL** effect.
- The **PHASE CONTROL** mode cannot be set to **ON** in the following cases:
  — When headphones are plugged in.
  — When the **PURE DIRECT** mode is switched on.
  — When the **HDMI** audio output parameter is set to **THROUGH** in Setting the Setting the Audio options on page 89.

Better sound using Phase Control and Full Band Phase Control

This receiver is equipped with the two types of functions that correct phase distortion and group delay: Phase Control and Full Band Phase Control. Activating Full Band Phase Control is strongly recommended because it also involves the effects of Phase Control.
The Full Band Phase Control feature calibrates the frequency-phase characteristics of the speakers connected. Standard speakers designed exclusively for audio use generally reproduce sound with the divided frequency bands output from a speaker system consisting of multiple speakers (in case of typical 3-way speakers, for instance, the tweeter, the squawker (midrange), and the woofer output sound in the high-, middle-, and low-frequency ranges, respectively). Though these speakers are designed to flatten the frequency-amplitude characteristics across wide ranges, there are cases where the group delay characteristics are not effectively flattened. This phase distortion of the speakers subsequently causes group delay (the delay of low-frequency sound against high-frequency sound) during audio signal playback.
This receiver analyzes the frequency-phase characteristics of the speakers by measuring test signals output from the speakers with the supplied microphone, therefore flattening the analyzed frequency-phase characteristics during audio signal playback - the same correction is made for a pair of left and right speakers. This correction minimizes group delay between the ranges of a speaker and improves the frequency-phase characteristics across all ranges.
Furthermore, the enhanced frequency-phase characteristics between channels ensure better surround sound integration for multichannel setting.

- Upon shipment from the factory, the Phase Control function is in on status. If you perform **Full Auto MCACC** (page 59) or **Full Band Phase Ctrl** of **Auto MCACC** (page 105), the Full Band Phase Control function is automatically turned on after measurement. By turning Full Band Phase Control on, the Phase Control function is turned on as well. Therefore, we recommend that usually the function be used with Full Band Phase Control on.

1 Press MAIN RECEIVER to switch the remote control to the receiver operation mode, and then press AUDIO P..

2 Use ⬆/⬇ to select 'PHASE'.

3 Use ⬅/➡ to select 'FULLBND'.

Both the Phase Control and Full Band Phase Control functions are switched on. The **FULL BAND** and indicator, on the front panel lights.

Notes

- The original characteristics of group delay of the speakers calibrated and the targeted characteristics after correction can be displayed graphically in the GUI screen (see Checking MCACC Data on page 109). Also, by transferring the measurement data to the computer using the CD-ROM, the original characteristics of group delay of the speakers calibrated and the corrected characteristics of group delay can be displayed in 3-dimension on your PC. For details, refer to the operating instructions for the MCACC PRO PC Display Application Software included on the CD-ROM.
- Depending on the input signal and listening mode, it may not be possible to set the **Full Band Phase Ctrl** mode to **ON**.
- The **Full Band Phase Ctrl** mode cannot be set to **ON** in the following cases:
  — When headphones are plugged in.
  — When the **PURE DIRECT** mode is switched on.
  — When the **HDMI** audio output parameter is set to **THROUGH** in Setting the Setting the Audio options on page 89.
- The Full Band Phase Control function does not work for Dolby Enabled Speakers since they are full-range speakers.

Using the Full Band Phase Control's FRONT ALIGN function

Full Band Phase Control calibrates frequency phase disturbances (group delay) for the full speaker band (Full Band) (**SYMMETRY**), but with this unit it is also possible to calibrate the frequency phase characteristics of other speakers to the frequency phase characteristics of the front speakers (**FRONT ALIGN**).
Full Band Phase Control calibration can be performed in the **FRONT ALIGN** mode by making the settings and performing the operations below.

1 Perform Full Band Phase Control measurements with the Full Auto MCACC (or Auto MCACC) procedure.

2 Perform measurements with EQ Type set to FRONT ALIGN with the Full Auto MCACC (or Auto MCACC) procedure.

3 Select the MCACC memory in which EQ Type is measured by FRONT ALIGN under the MCACC (Selecting MCACC presets on page 75) of the audio parameter function.

4 Turn Full Band Phase Control on.

- Full Band Phase Control does not turn on with listening modes in which sound is only played on the front speakers or the front speakers and subwoofer.

Playback with NETWORK features

Introduction 78
Playback with Network functions 79
About network playback 81
About playable file formats 83

Introduction

This receiver is equipped with the LAN terminal and you can enjoy the following features by connecting your components to these terminals.

Listening to Internet radio stations

You can select and listen to your favorite Internet radio station from the list of Internet radio stations created, edited, and managed by the vTuner database service exclusively for use with the Pioneer products.

→See Playback with Network functions on page 79 and Listening to Internet radio stations on page 79.

Playback the music files stored in PCs

You can playback a lot of musics stored in your PCs using this unit.

- Besides a PC, you can also play back audio files stored on your other components with the built-in media server function based on DLNA 1.0 or DLNA 1.5 framework and protocols (i.e. network-capable hard disks and audio systems).

→See Playback with Network functions on page 79 and Playing back audio files stored on components on the network on page 81.

Listening to Pandora Internet Radio

→See Listening to Pandora Internet Radio on page 80.

Listening to Spotify audio streaming playback

→See About the Spotify audio stream playback function on page 80.

Notes

- To listen to Internet radio stations, you must sign a contract with an ISP (Internet Service Provider) beforehand.
- Photo or video files cannot be played back.
- With Windows Media Player 11 or Windows Media Player 12, DRM-protected audio files cannot be played back on this receiver.

About playable DLNA network devices

This unit allows you to play music on media servers connected on an identical Local Area Network (LAN) as the receiver. This unit allows for the playing of files stored on the following devices:

- PCs running Microsoft Windows 7 or Windows 8 with Windows Media Player 12 installed
- DLNA-compatible digital media servers (on PCs or other components)

Files stored in a PC or DMS (Digital Media Server) as described above can be played via command from an external Digital Media Controller (DMC). Devices controlled by this DMC to play files are called DMRs (Digital Media Renderers). This receiver supports this DMR function. When in the DMR mode, such operations as playing and stopping files can be performed from the external controller. Volume adjustment and the muting control are also possible. The DMR mode is canceled if the remote control unit is operated while in the DMR mode (aside from certain buttons, including the **VOLUME +/–**, **MUTE** and **DISP**).

- Depending on the external controller being used, playback may be interrupted when the volume is adjusted from the controller. In this case, adjust the volume from the receiver or remote control.

Using AirPlay on iPod touch, iPhone, iPad, and iTunes

AirPlay works with iPhone, iPad, and iPod touch with iOS 4.3.3 or later, Mac with OS X Mountain Lion or later, and PC with iTunes 10.2.2 or later.

To use AirPlay, select your receiver on your iPod touch, iPhone, iPad or in iTunes. ∗1

The receiver's input will switch automatically to AirPlay when AirPlay is in use. ∗2

The following operations can be performed when in AirPlay mode:

- Adjustment of the receiver's volume from iPod touch, iPhone, iPad or iTunes.
- Pause/resume, next/previous track, and shuffle/repeat from the remote control of the receiver. ∗3
- Display of the currently playing track information on the receiver's display, including artist, song and album name.

∗1: For more information, see the Apple website (http://www.apple.com).

∗2: The receiver's power automatically turns on when **Network Standby** at **Network Option** is set to **ON**.

∗3: If operation is not possible, press **NET**, then operate again.

Notes

- A network environment is required to use AirPlay.
- The receiver's name that shows up in the AirPlay UI on iPod touch, iPhone, iPad and iTunes can be changed by **Friendly Name** from **Network Option**.
- AirPlay provided on this receiver has been developed and tested based on the software versions for the iPod, iPhone, iPad and the software versions for iTunes that are indicated on the Pioneer website. AirPlay may not be compatible with iPod, iPhone, iPad or iTunes software versions other than those indicated on the Pioneer website.
  http://pioneer.jp/homeav/support/ios/na/

About the DHCP server function

To play back audio files stored on components on the network or listen to Internet radio stations, you must turn on the DHCP server function of your router. In case your router does not have the built-in DHCP server function, it is necessary to set up the network manually. Otherwise, you cannot play back audio files stored on components on the network or listen to Internet radio stations. See Setting network connection on page 53 for more on this.

Authorizing this receiver

This receiver must be authorized to enable playback. This happens automatically when the receiver makes a connection over the network to the PC. If not, please authorize this receiver manually on the PC. The authorization (or permission) method for access varies depending on the type of server currently being connected. For more information on authorizing this receiver, refer to the instruction manual of your server.

About HTC Connect

This receiver features "HTC Connect", a simple way to enjoy music content from your HTC Connect certified smart phone.

1 HTC Connect music streaming provided on this product has been developed based on interoperability testing as defined by the HTC Connect Certification program with the HTC Connect-compatible smartphones.
2 Music Navigation via the music progress bar is not currently supported with HTC Connect.
3 Third party music applications (those other than HTC's pre-installed "Music" app) have not been tested for compatibility and may not work. HTC Connect has been tested with MP3, AAC, WMA and WAV encoding formats. Other formats may not be compatible.
4 High network congestion may interfere with the operation of HTC Connect.

HTC Connect Certified Smartphones

The HTC Connect-compatible smartphones, Please check Pioneer website for up to date information about compatible devices and audio format support.

http://www.pioneerelectronics.com/htc (for USA)
http://www.pioneerelectronics.ca/htc (for Canada)

Notes

- Specifications and design subject to modification without notice.
- HTC, HTC Connect and the HTC Connect logo are trademarks of HTC Corporation.

Playback with Network functions

Important

- About one minute is required between turning the power on and completion of startup.
- When you play back audio files, '**Connecting...**' is displayed before playback starts. The display may continue for several seconds depending on the type of file.
- In case a domain is configured in a Windows network environment, you cannot access a PC on the network while you are logged onto the domain. Instead of logging onto the domain, log onto the local machine.
- There are cases where the time elapsed may not be correctly displayed.

1 Press NET repeatedly to select the category you want to play back.

It may take several seconds for this receiver to access the network.
Select a category from the following list:

- **INTERNET RADIO** – Internet radio
  — When **INTERNET RADIO** is selected, the radio station that was playing last time is played.
- **PANDORA** – Internet radio that supports Pandora
- **Spotify** – Music streaming distribution service
- **MEDIA SERVER** – Server components on the network
- **FAVORITES** – Favorite songs currently being registered

Depending on the selected category, the names of folders, files, and Internet radio stations are displayed.

2 Use ⬆/⬇ to select the folder, music files or Internet radio station to play back, and then press ENTER.

Press ⬆/⬇ to scroll up and down the list and select the desired item. When you press **ENTER**, playback starts with the playback screen being displayed for the selected item. To return to the list screen, press **RETURN**.
When the list screen is displayed from the playback screen, the playback screen reappears automatically if no operation is performed for three minutes while the list screen is displayed.
Only audio files with the ♫ mark can be played. In case of the folders with the 🗀 mark, use ⬆/⬇ and **ENTER** to select the desired folder and audio files.

- When ⏮ or ⏭ is pressed at the list screen, the page switches.
- To return to the playback screen from the list display, press **DISP**.

3 Repeat step 2 to play back the desired song.

For detailed operating instructions, refer to the section shown below.

- Internet radio stations – See Listening to Internet radio stations on page 79.
- Pandora – See Listening to Pandora Internet Radio on page 80.
- Spotify – See About the Spotify audio stream playback function on page 80.
- Media server – See Playing back audio files stored on components on the network on page 81.
- Favorites – See Playing back your favorite songs on page 81.

Basic playback controls

You can perform the following operations with the remote control of this receiver. Note that some buttons are not available for operation depending on the category currently being played back.

- Press **NET** to switch the remote control to the network operation mode.

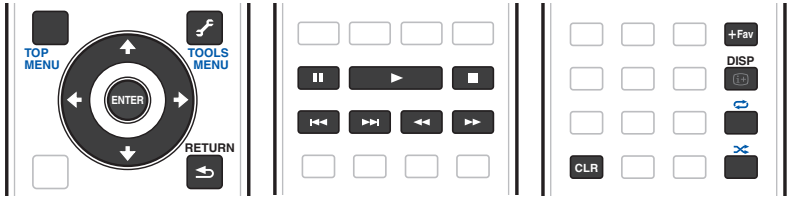

Notes

- When input is **MEDIA SERVER** or **FAVORITES**, the following action is taken, depending on the server or file.
  — ⏸ may not work.
  — ◀◀ and ▶▶ may not work or may take the same action as ⏮ and ⏭.
- When input is **MEDIA SERVER**, by pressing **TOOLS** on the list display screen, you can switch the displayed titles in alphabetical order or track order.

Listening to Internet radio stations

Internet radio is an audio broadcasting service transmitted via the Internet. There are a large number of Internet radio stations broadcasting a variety of services from every corner of the world. Some are hosted, managed, and broadcast by private individuals while others are by the corresponding traditional terrestrial radio stations or radio networks. Whereas terrestrial, or OTA (over-the-air), radio stations are geographically restricted on the range of radio waves broadcast from a transmitter through the air, Internet radio stations are accessible from anywhere in the world, as long as there is a connection to the Internet, as services are not transmitted through the air but are delivered over the World Wide Web. On this receiver you can select Internet radio stations by genre as well as by region.
Depending on the Internet line conditions, the sound may not be smooth when playing Internet radio.

About list of Internet radio

The list of Internet radio stations on this receiver is created, edited, and managed by the vTuner database service exclusively for use with this receiver. For details about vTuner, see vTuner on page 143.

Saving and retrieving Internet radio stations

You can easily save and retrieve saved Internet radio stations. See Playing back your favorite songs on page 81 for more on this.

- To listen to Internet radio stations, you must have high-speed broadband Internet access. With a 56 K or ISDN modem, you may not enjoy the full benefits of Internet radio.
- The port number varies depending on the Internet radio station. Check the firewall settings.
- A list of Internet radio stations provided by the vTuner database service is subject to change or deletion without notice due to various reasons.
- Broadcasts may be stopped or interrupted depending on the Internet radio station. In this case, you cannot listen to a radio station selected from the list of Internet radio stations.

Registering broadcast stations not on the vTuner list from the special Pioneer site

With the receiver, broadcast stations not included on the list of station distributed by vTuner can be registered and played. Check the access code required for registration on the receiver, use this access code to access the special Pioneer Internet radio site and register the desired broadcast stations in your favorites. The address of the special Pioneer Internet radio site is:
http://www.radio-pioneer.com

1 Display the Internet Radio list screen.

To display the Internet Radio list screen, perform step 1 at Playback with Network functions on page 79.

2 Use ⬆/⬇ to select 'Help', then press ENTER.

3 Use ⬆/⬇ to select 'Get access code', then press ENTER.

The access code required for registration on the special Pioneer Internet radio site is displayed. Make a memo of this address.
The following can be checked on the **Help** screen:

- **Get access code** – The access code required for registration on the special Pioneer Internet radio site is displayed.
- **Show Your WebID/PW** – After registering on the special Pioneer Internet radio site, the registered ID and password are displayed.
- **Reset Your WebID/PW** – Resets all the information registered on the special Pioneer Internet radio site. When reset, all the registered broadcast stations are also cleared. If you want to listen to the same stations, re-register after resetting.

4 Access the special Pioneer Internet radio site from your computer and perform the registration process.

http://www.radio-pioneer.com
Access the above site and use the access code in step 3 to perform user registration, following the instructions on the screen.

5 Register the desired broadcast stations as your favorites, following the instructions on the computer's screen.

Both broadcast stations not on the vTuner list and stations on the vTuner list can be registered. In this case they are registered on the receiver as favorite broadcast stations and can be played.

Listening to Pandora Internet Radio

Pandora is personalized internet radio that is designed to help you discover new music you'll love mixed in with music you already know.
For details, check the website: http://www.pandora.com

- You must have a registered account in order to listen to songs using Pandora Internet Radio. Select **PANDORA**, then follow the instructions on the screen to make the account settings.
- See the Pandora website for regions in which the Pandora service is offered.
- Some functions may be changed at Pandora's discretion.

Notes

- When disposing of the product, we recommend you reset it to delete the data. See Resetting the system on page 97.
- *Pandora®, the leading internet radio service, gives people music they love anytime, anywhere, through personalized radio stations.*

Inputting characters using the software keyboard

1 Press TOOLS to switch to the software keyboard operation mode.

2 Use ⬆/⬇/⬅/➡ to select letters or symbols, then press ENTER.

Repeat this until all the desired characters have been input.

3 Select 'OK' on the software keyboard, then press ENTER.

- To quit inputting characters using the software keyboard, press the **TOOLS** button.

About the Spotify audio stream playback function

Spotify is a music streaming distribution service managed and operated by Spotify Ltd. and distributing music over the Internet.
Spotify audio streams can be enjoyed using this unit and your smartphone or other mobile digital device.

Preparations (1) Installing the Spotify application on mobile digital devices and registering a Spotify Premium account

Important

- The Spotify application must be installed on mobile digital devices and you must have registered a Spotify Premium account (for a charge) in order to use the Spotify audio stream playback function on this unit. For registration procedures and other Spotify services, see the Spotify website.
  http://www.spotify.com/
  http://www.spotify.com/connect/
- For information on the countries and regions where Spotify services can be used, see the website below.
  http://www.spotify.com/

Spotify functions may be changed without notice.
An Internet connection is required on the mobile digital device in order to use the Spotify application. Using the mobile telephone line for the Internet connection tends to lead to high packet communication charges, so we recommend subscribing to a fixed packet rate plan. For details, contact your mobile telephone operator.

Preparations (2) Connecting this unit to the network

- Connect this unit to the network and also to the Internet (page 47).
- Connect the mobile digital device by Wi-Fi to the wireless LAN router of the same network as the one to which this unit is connected. For instructions on connecting, see the operating instructions of the mobile digital device and the wireless LAN router.

Using This Device With Spotify Connect

Spotify lets you listen to millions of songs – the artists you love, the latest hits and discoveries just for you.
If you are a Spotify user, you can control this device using your Spotify app.
Step 1. Connect your device to the same Wi-Fi network as your phone, tablet or PC running the Spotify app.
Step 2. Open the Spotify app, and play any song.
Step 3. Tap the song image in the bottom left of the screen.
Step 4. Tap the Connect icon.
Step 5. Pick your device from the list.
For information on how to set up and use Spotify Connect please visit
http://www.spotify.com/connect/

CAUTION

Even if you are away from home, if you start Spotify audio streaming to play music on your mobile digital device and this unit is selected, the sound will be output from this unit. Depending on the volume level, the output may be loud, so be sure to check the audio output selection carefully before starting audio streaming. In addition, if you accidentally select this unit and play the sound on it, switch the audio output selection to the mobile digital device.

Notes

- A separate contract with/payment to an Internet service provider is required to use the Spotify audio stream playback function.
- This unit's name is displayed as the playback device on the Spotify application. Also, this unit's name can be changed at **Friendly Name** in the network settings.
- When this unit is selected with the Spotify application, the account information is registered on this unit as well. When disposing of this unit, reset this unit's settings in order to delete the account information registered on this unit. For instructions on resetting, see this unit's operating instructions.

Playing back audio files stored on components on the network

This unit allows you to play music on media servers connected on an identical Local Area Network (LAN) as the receiver. This unit allows for the playing of files stored on the following devices:

- PCs running Microsoft Windows Vista or XP with Windows Media Player 11 installed
- PCs running Microsoft Windows 7 or Windows 8 with Windows Media Player 12 installed
- DLNA-compatible digital media servers (on PCs or other components)

Playing back your favorite songs

Up to 64 favorite tracks on the media server and/or Internet radio stations can be registered in the Favorites folder. Note that only the audio files stored on components on the network can be registered.

Registering and deleting audio files and Internet radio stations in and from the Favorites folder

1 Press NET repeatedly to select the INTERNET RADIO or MEDIA SERVER.

2 With the track or Internet radio station you want to register selected, press +Fav (Favorite).

The selected song or Internet radio station is then registered in the Favorite.

Note

To delete tracks or Internet radio stations that have been registered, set the input to **FAVORITES**, select the track or station to be deleted, then press the **CLR** button.

About network playback

The network playback function of this unit uses the following technologies:

Windows Media Player

See Windows Media Player 11/Windows Media Player 12 on page 143 for more on this.

DLNA

DLNA CERTIFIED™ Audio Player
The Digital Living Network Alliance (DLNA) is a cross-industry organization of consumer electronics, computing industry and mobile device companies. Digital Living provides consumers with easy sharing of digital media through a wired or wireless network in the home.
The DLNA certification logo makes it easy to find products that comply with the DLNA Interoperability Guidelines.
This unit complies with DLNA Interoperability Guidelines v1.5.
When a PC running DLNA server software or other DLNA compatible device is connected to this player, some setting changes of software or other devices may be required. Please refer to the operating instructions for the software or device for more information.
DLNA™, the DLNA Logo and DLNA CERTIFIED™ are trademarks, service marks, or certification marks of the Digital Living Network Alliance.

Content playable over a network

- Even when encoded in a compatible format, some files may not play correctly.
- Movie or Photo files cannot be played back.
- There are cases where you cannot listen to an Internet radio station even if the station can be selected from a list of radio stations.
- Some functions may not be supported depending on the server type or version used.
- Supported file formats vary by server. As such, files not supported by your server are not displayed on this unit. For more information check with the manufacturer of your server.

Disclaimer for Third Party Content

ACCESS TO THIRD PARTY CONTENT SERVICES, INCLUDING ALL ASSOCIATED FEATURES AND FUNCTIONALITIES, IS PROVIDED "AS IS," "AS AVAILABLE" AND AT THE USER'S OWN RISK, WITHOUT WARRANTY OF ANY KIND. PIONEER DISCLAIMS ALL WARRANTIES, EXPRESS OR IMPLIED, IN CONNECTION WITH ACCESS TO AND USE OF CONTENT SERVICES THROUGH THIS DEVICE, INCLUDING WITHOUT LIMITATION WARRANTIES OF MERCHANTABILITY, SATISFACTORY QUALITY, FITNESS FOR A PARTICULAR PURPOSE, AND NON-INFRINGEMENT. PIONEER DOES NOT GUARANTEE, REPRESENT, OR WARRANT THAT CONTENT SERVICES WILL BE FREE FROM ERRORS, INTERRUPTION, LOSS, CORRUPTION, ATTACK, VIRUSES, INTERFERENCE, HACKING, OR OTHER SECURITY INTRUSION, AND PIONEER DISCLAIMS ANY LIABILITY IN CONNECTION WITH THE FOREGOING. PIONEER IS NOT LIABLE OR RESPONSIBLE FOR ANY LOSS OR DAMAGE ARISING FROM ACCESS TO OR USE OF CONTENT. NO ORAL OR WRITTEN INFORMATION OR ADVICE GIVEN BY PIONEER OR ITS CUSTOMER SERVICES REPRESENTATIVES WILL CREATE ANY SUCH WARRANTY.
IN NO EVENT WILL PIONEER, ITS AFFILIATES, OR THEIR RESPECTIVE OFFICERS, DIRECTORS, OR EMPLOYEES BE LIABLE IN CONNECTION WITH YOUR USE OF THIRD PARTY CONTENT SERVICES THROUGH THIS DEVICE FOR PERSONAL INJURY OR SPECIAL, INCIDENTAL, INDIRECT OR CONSEQUENTIAL DAMAGES OF ANY KIND, INCLUDING WITHOUT LIMITATION DAMAGES FOR ATTORNEY'S FEES, LOST DATA OR LOST PROFITS, REGARDLESS OF THE THEORY OF LIABILITY AND WHETHER OR NOT ADVISED OF THE POSSIBILITY OF SUCH DAMAGES. IN NO EVENT WILL PIONEER'S TOTAL LIABILITY TO YOU FOR ALL DAMAGES ARISING FROM THE USE OR INABILITY TO USE THIRD PARTY CONTENT SERVICES (OTHER THAN AS MAY BE REQUIRED BY LAW IN CASES INVOLVING PERSONAL INJURY) EXCEED $10.00. THE FOREGOING LIMITATIONS WILL APPLY EVEN IF THE ABOVE REMEDY FAILS OF ITS ESSENTIAL PURPOSE. IF ANY APPLICABLE AUTHORITY HOLDS ANY PORTION OF THIS SECTION TO BE UNENFORCEABLE, THEN LIABILITY WILL BE LIMITED TO THE MAXIMUM EXTENT PERMITTED BY APPLICABLE LAW.

About playback behavior over a network

- Playback may stall when the PC is switched off or any media files stored on it are deleted while playing content.
- If there are problems within the network environment (heavy network traffic, etc.) content may not be displayed or played properly (playback may be interrupted or stalled). For best performance, a 100BASE-TX connection between player and PC is recommended.
- If several clients are playing simultaneously, as the case may be, playback is interrupted or stalled.
- Depending on the security software installed on a connected PC and the setting of such software, network connection may be blocked.

Pioneer is not responsible for any malfunction of the player and/or the NETWORK features due to communication error/malfunctions associated with your network connection and/or your PC, or other connected equipment. Please contact your PC manufacturer or Internet service provider.

This product includes technology owned by Microsoft Corporation and cannot be used or distributed without a license from Microsoft Licensing, Inc.

Microsoft, Windows, Windows Media and Windows Vista are either registered trademarks or trademarks of Microsoft Corporation in the United States and/or other countries.

About playable file formats

The NETWORK feature of this receiver supports the following file formats. Note that some file formats are not available for playback although they are listed as playable file formats. Also, the compatibility of file formats varies depending on the type of server. Check with your server to ensure the compatibility of file formats supported by your server.

- Internet radio playback may be affected by the Internet communications environment, and in this case playback may not be possible even with the file formats listed here.
- For MP3, WAV, AAC, FLAC, AIFF, Apple Lossless, and DSD files, gapless play will be performed when a music file with identical format, sampling frequency, number of quantization bits, and number of channels is continuously played.
  - —Gapless playback is not possible when the format is being converted (transcoded) by the server.
  - —Gapless playback is not possible in the DMR mode.
  - —When AAC or MP3 format is used, sound is reproduced with the minimum gap. If you are conscious about gaps, use WAV or FLAC files.

Music files

Category	Extension	Stream		
MP3 <a>	.mp3	MPEG-1 Audio Layer-3	Sampling frequency	32 kHz, 44.1 kHz, 48 kHz
			Quantization bitrate	16 bit
			Channel	2 ch
			Bitrate	8 kbps to 320 kbps
			VBR/CBR	Supported/Supported
WAV	.wav	LPCM	Sampling frequency <b>	32 kHz, 44.1 kHz, 48 kHz, 88.2 kHz, 96 kHz, 176 4 kHz, 192 kHz
			Quantization bitrate	16 bit, 24 bit
			Channel	2 ch, 5.0 ch, 5.1 ch <c>
WMA	.wma	WMA2/7/8/9 <d>	Sampling frequency	32 kHz, 44.1 kHz, 48 kHz
			Quantization bitrate	16 bit
			Channel	2 ch
			Bitrate	5 kbps to 320 kbps
			VBR/CBR	Supported/Supported
AAC	.m4a aac 3gp 3g2	MPEG-4 AAC LC MPEG-4 HE AAC	Sampling frequency	32 kHz, 44.1 kHz, 48 kHz
			Quantization bitrate	16 bit
			Channel	2 ch
			Bitrate	16 kbps to 320 kbps
			VBR/CBR	Supported/Supported
Apple Lossless	.m4a .mp4	Apple Lossless	Sampling frequency	32 kHz, 44.1 kHz, 48 kHz, 88.2 kHz, 96 kHz, 176 4 kHz, 192 kHz
			Quantization bitrate	16 bit, 24 bit
			Channel	2 ch
FLAC <e>	.flac	FLAC	Sampling frequency <b>	32 kHz, 44.1 kHz, 48 kHz, 88 2 kHz, 96 kHz, 176.4 kHz, 192 kHz
			Quantization bitrate	16 bit, 24 bit
			Channel	2 ch, 5.0 ch, 5.1 ch <c>
AIFF	.aiff .aif	.aiff .aif	Sampling frequency	32 kHz, 44.1 kHz, 48 kHz, 88 2 kHz, 96 kHz, 176.4 kHz, 192 kHz
			Quantization bitrate	16 bit, 24 bit
			Channel	2 ch
DSD <f>	.dff .dsf	DSDIFF DSF	Sampling frequency	2.8224 MHz, 5 6448 MHz
			Quantization bitrate	1 bit
			Channel	2 ch

a *"MPEG Layer-3 audio decoding technology licensed from Fraunhofer IIS and Thomson multimedia."*
b 32 kHz, 176 4 kHz and 192 kHz support 2-channel audio sources only.
c • When playing the 5.0 channel or 5.1 channel file in the sub zone, only the front left and right sound is played. Multichannel playback is only available with the main zone.
• Audio for 5.0 ch and 5.1 ch for wireless connection can be played only when the sampling frequency is 48 kHz or below.
d Files encoded using Windows Media Codec 9 may be playable but some parts of the specification are not supported; specifically, Pro, Lossless, Voice.
e Uncompressed FLAC files are not supported. Pioneer does not guarantee playback.
f DSD files cannot be played in the sub zone.

Control with HDMI function

About the Control with HDMI function 85
Making Control with HDMI connections 85
HDMI Setup 85
Before using synchronization 86
About synchronized operations 86
Setting the PQLS function 87
About Sound Retriever Link and Stream Smoother Link 87
Cautions on the Control with HDMI function 87

About the Control with HDMI function

Synchronized operations below with a **Control** with HDMI-compatible Pioneer TV or Blu-ray Disc player are possible when the component is connected to the receiver using an HDMI cable.

- The receiver's volume can be set and the sound can be muted using the TV's remote control.
- The receiver's input switches over automatically when the TV's input is changed or a **Control** with HDMI-compatible component is played.
- The receiver's power is also set to standby, when the TV's power is set to standby.

Important

- With Pioneer devices, the **Control** with HDMI functions are referred to as "KURO LINK".
- You cannot use this function with components that do not support **Control** with HDMI.
- We only guarantee this receiver will work with Pioneer **Control** with HDMI-compatible components. However, we do not guarantee that all synchronized operations will work with components that support the **Control** with HDMI function.
- Use a High Speed HDMI®/™ cable when you want to use the **Control** with HDMI function. The **Control** with HDMI function may not work properly if a different type of HDMI cable is used.
- For details about concrete operations, settings, etc., refer to also the operating instructions for each component.

Making Control with HDMI connections

You can use synchronized operation for a connected TV and other components.

- Be sure to connect the TV's audio cable to the audio input of this unit. When the TV and receiver are connected by HDMI connections, if the TV supports the HDMI ARC (Audio Return Channel) function, the sound of the TV is input to the receiver via the **HDMI OUT 1** terminal, so there is no need to connect an audio cable. In this case, set **ARC** at **HDMI Setup** to **ON** (see HDMI Setup on page 85).

For details, see Connecting your TV and playback components on page 38.

Important

- When connecting this system or changing connections, be sure to switch the power off and disconnect the power cord from the wall socket. After completing all connections, connect the power cords to the wall socket.
- After this receiver is connected to an AC outlet, a 2 second to 10 second HDMI initialization process begins. You cannot carry out any operations during this process. The **HDMI** indicator in the front panel display blinks during this process, and you can turn on this receiver once it has stopped blinking. When you set the **Control** with HDMI to **OFF**, you can skip this process. For details about the **Control** with HDMI feature, see Control with HDMI function on page 84.
- To get the most out of this function, we recommend that you connect your HDMI component not to a TV but rather directly to the HDMI terminal on this receiver.
- The **Control** with HDMI function works on the TV connected to the **HDMI OUT 1** terminal. It does not work on TVs connected to the **HDMI OUT 2** or **HDMI OUT 3** terminals.

HDMI Setup

You must adjust the settings of this receiver as well as the connected **Control** with HDMI-compatible components in order to make use of the **Control** with HDMI function. For more information see the operating instructions for each component.

1 Press MAIN RECEIVER to switch the remote control to the receiver operation mode, and then press HOME MENU.

2 Select 'System Setup', then press ENTER.

3 Select 'HDMI Setup', then press ENTER.

4 Select the 'Control' setting you want.

Choose whether to set this unit's **Control** with HDMI function **ON** or **OFF**. You will need to set it to **ON** to use the **Control** with HDMI function.

When using a component that does not support the **Control** with HDMI function, set this to **OFF**.

- **ON** – Enables the **Control** with HDMI function. Set **Control Mode**, **ARC** and **PQLS** in the subsequent setting items to the desired values.
  Also, by setting this to **ON**, the Sound Retriever Link and Stream Smoother Link functions can be operated automatically by connecting a player supporting the respective functions. See Setting the Audio options on page 89 for details on Sound Retriever Link, Setting the Video options on page 91 for details on Stream Smoother Link.
- **OFF** – The **Control** with HDMI is disabled. The **Control Mode**, **ARC** and **PQLS** functions in the subsequent setting items cannot be used.

5 Select the 'Control Mode' setting you want.

Choose whether you want to enable synchronized operations.

- **ON** – Enabled for the synchronized operations.
- **OFF** – The synchronized operations disabled.

6 Select the 'ARC' setting you want.

When a TV supporting the HDMI ARC (Audio Return Channel) function is connected to the receiver, the sound of the TV can be input via the **HDMI OUT 1** terminal.

After setting the **ARC**, some time may be required for the connected device to be recognized and the sound to be produced.

- **ON** – The TV's sound is input via the HDMI terminal.
- **OFF** – The TV's sound is input from the Audio input terminals other than HDMI inputs.

7 Select the 'PQLS' setting you want.

Choose whether to set this unit's **PQLS** function **AUTO** or **OFF**.

For details about PQLS function, see Setting the PQLS function on page 87.

- **AUTO** – PQLS is enabled. A precision quartz controller in this receiver eliminates distortion caused by timing errors (jitter), giving you the best possible digital-to-analog conversion when you use the HDMI interface. This is valid as an HDMI function for PQLS-compatible players.
- **OFF** – PQLS is disabled.

8 Select the 'Standby Through' setting you want.

It is possible to transfer signals from an HDMI-connected player to the TV when this receiver's power is on standby.

Select the HDMI input whose HDMI signal is to be input for through transfer when in the standby mode. When **LAST** is selected, the signal being input to the currently selected HDMI input is transferred. When **OFF** is selected, no HDMI input is transferred through when in the standby mode. (However, when **Control** is set to **ON**, the HDMI signal is transferred through by the **Control** with HDMI function even when in the standby mode.)

- When anything other than **OFF** is set for this setting, the receiver's HDMI input can be switched even when the receiver is in the standby mode. (Switch by pointing the remote control at the receiver and pressing the **HDMI**, **BD**, **DVD** or **SAT** button.)
- Setting to anything other than **OFF** increases power consumption in the standby mode.
- This setting can be used even with devices that are not compatible with the **Control** with HDMI function.
- The Standby Through function cannot be used with MHL-compatible devices.

9 Select the '12V Trigger' setting you want.

The component connected to the **12 V TRIGGER** jack can be turned on and off when **HDMI OUT** is switched. **OUT 1**, **OUT 2**, **OUT 3** or **OFF** can be selected. Select **OFF** when you want the component to switch when the input function is switched.

10 Select the 'Speaker B Link' setting you want.

When **ON** is selected here, the speaker terminals that are played (the **OUT P.** button setting) can be changed automatically when **HDMI OUT 1** and **HDMI OUT 2** are switched. This only works when **7.2.2/7.2ch + SP-B** or **5.2ch + SP-B Bi-Amp** is selected for the **Speaker System** setting.

- **OFF** – The speaker terminals that are played (the **OUT P.** button setting) do not change automatically when **HDMI OUT 1** and **HDMI OUT 2** are switched.
- **ON** – The speaker terminals that are played (the **OUT P.** button setting) change automatically when **HDMI OUT 1** and **HDMI OUT 2** are switched. For details, see Switching the HDMI output on page 94.

11 When you're finished, press HOME MENU.

Before using synchronization

Once you have finished all connections and settings, you must:

1 Put all components into standby mode.

2 Turn the power on for all components, with the power for the TV being turned on last.

3 Choose the HDMI input to which the TV is connected to this receiver, and see if video output from connected components displays properly on the screen or not.

4 Check whether the components connected to all HDMI inputs are properly displayed.

About synchronized operations

Important

- Synchronized operations are enabled when **Control Mode** is set to **ON** after setting **Control** in **HDMI Setup** to **ON**. For details, see HDMI Setup on page 85.

The **Control** with HDMI-compatible component connected to the receiver operates in sync as described below.

- From the menu screen of the **Control** with HDMI-compatible TV, set audio to be played through this receiver, and the receiver will switch to the synchronized amp mode.
- When in the synchronized amp mode, you can adjust the receiver's volume or mute the sound using the TV's remote control.
- When in the synchronized amp mode, the synchronized amp mode is canceled when the receiver's power is turned off. To turn the synchronized amp mode back on, set audio to be played through the receiver from the TV's menu screen, etc. This receiver will power up and switch to the synchronized amp mode.
- When the synchronized amp mode is canceled, the receiver's power turns off if you were viewing an HDMI input or a TV program on the TV.
- When in the synchronized amp mode, the synchronized amp mode is canceled if an operation that produces sound from the TV is performed from the TV's menu screen, etc.
- When the TV's power is set to standby, the receiver's power is also set to standby. (Only when the input for a component connected to the receiver by HDMI connection is selected or when watching the TV.)
- The receiver's input switches automatically when the **Control** with HDMI-compatible component is played.
- The receiver's input switches automatically when the TV's input is switched.
- The synchronized amp mode remains in effect even if the receiver's input is switched to a component other than one connected by HDMI.

The operations below can also be used on Pioneer **Control** with HDMI-compatible TVs.

- When the receiver's volume is adjusted or the sound is muted, the volume status is displayed on the TV's screen.
- When the OSD language is switched on the TV, the receiver's language setting also switches accordingly.

Setting the PQLS function

PQLS (Precision Quartz Lock System) is a digital audio signal transfer control technology using the **Control** with HDMI function. It offers higher-quality audio playback by controlling audio signals from the receiver to a PQLS compatible player, etc. This enables removing jitter that has a negative effect on the quality of the sound and is generated upon transmission.

- On players compatible with PQLS Bit-stream, PQLS always works for all sources.
- On players compatible with PQLS Multi Surround, PQLS works for all sources. Set the player's audio output to Linear PCM.
- On players compatible with PQLS 2 ch Audio, PQLS only works when playing CDs.

Please refer to the operating instructions supplied with your player for more information.
This function is activated when **Control** is set to **ON**.

Tip

- The PQLS setting is set at **PQLS** in **HDMI Setup** on the **HOME MENU**, but the setting can also be switched with the remote control, as described below.

1 Press MAIN RECEIVER to switch the remote control to the receiver operation mode, and then press AUDIO P..

2 Use ⬆/⬇ to select 'PQLS'.

3 Use ⬅/➡ to select the PQLS setting.

The setting is displayed on the front panel display.

- **AUTO** – PQLS is enabled. A precision quartz controller in this receiver eliminates distortion caused by timing errors (jitter), giving you the best possible digital-to-analog conversion when you use the HDMI interface. This is valid as an HDMI function for PQLS-compatible players.
- **OFF** – PQLS is disabled.

About Sound Retriever Link and Stream Smoother Link

These are automatic functions allowing you to output optimum audio and video signals from the receiver using the **Control** with HDMI function. When a player supporting the respective function is connected to the receiver by HDMI, the sound/picture is optimized for the compressed audio/video file played on the player.

- Depending on the compressed audio/video file format, it may not be operated automatically.
- Also see the player's operating instructions.

Sound Retriever Link

When playing a compressed audio file on the player, the file's bitrate information is acquired using the **Control** with HDMI function, and the sound is optimized on the receiver based on this information.
To activate the Sound Retriever Link function, make the setting below.

1 Set the HDMI Setup's Control to ON, and set the Control Mode setting to ON.

See HDMI Setup on page 85.

2 Set the S.RTRV (Auto Sound Retriever) setting to ON.

See Setting the Audio options on page 89.

Stream Smoother Link

Using the **Control** with HDMI function, the receiver automatically detects whether a compressed video file is being played on the player, and if so automatically activates the Stream Smoother function.
To activate the Stream Smoother Link function, make the setting below.

1 Set the HDMI Setup's Control to ON, and set the Control Mode setting to ON.

See HDMI Setup on page 85.

2 Set the STREAM (Stream Smoother) setting to AUTO.

See Setting the Video options on page 91.

Cautions on the Control with HDMI function

- Connect the TV directly to this receiver. Interrupting a direct connection with other amps or an AV converter (such as an HDMI switch) can cause operational errors.
- Only connect components (Blu-ray Disc player, etc.) you intend to use as a source to the HDMI input of this receiver. Interrupting a direct connection with other amps or an AV converter (such as an HDMI switch) can cause operational errors.
- When the receiver's **Control** is turned **ON**, even if the receiver's power is in the standby mode, it is possible to output the audio and video signals from a player via HDMI to the TV without producing sound from the receiver, but only when a **Control** with HDMI-compatible component (Blu-ray Disc player, etc.) and compatible TV are connected. In this case, the receiver's power turns on and the power and **HDMI** indicators light.
- If the **Control** setting is not set to **OFF**, the power consumption during standby will increase.

Using other functions

Setting the Audio options 89
Setting the Video options 91
Switching the output (OUTPUT PARAMETER) 93
HDMI 4K/60p signal input setting 94
Changing the channel level while listening 94
Using the MULTI-ZONE controls 95
Making an audio or a video recording 96
Network settings from a web browser 96
Using the sleep timer 96
Dimming the display 96
Checking your system settings 96
Resetting the system 97

Setting the Audio options

There are a number of additional sound settings you can make using the **AUDIO PARAMETER** menu. The defaults, if not stated, are listed in bold.

Important

- Note that if a setting doesn't appear in the **AUDIO PARAMETER** menu, it is unavailable due to the current source, settings and status of the receiver.

1 Press MAIN RECEIVER to switch the remote control to the receiver operation mode, and then press AUDIO P..

2 Use ⬆/⬇ to select the setting you want to adjust.

Depending on the current status/mode of the receiver, certain options may not be able to be selected. Check the table below for notes on this.

3 Use ⬅/➡ to set as necessary.

See the table below for the options available for each setting.

4 Press RETURN to confirm and exit the menu.

Audio parameter menu

Setting	What it does	Option(s)
MCACC (MCACC preset)	Selects your favorite MCACC preset memory when multiple preset memories are saved. When an MCACC preset memory has been renamed, the given name is displayed.	◄ M1. MEMORY 1 to M6. MEMORY 6 ► Default: **M1. MEMORY 1**
EQ (Acoustic Calibration EQ)	Switches on/off the effects of EQ Pro.	**ON** OFF
S-WAVE (Standing Wave)	Switches on/off the effects of Standing Wave Control.	**ON** OFF
PHASE (Phase Control)	Switches on/off the effects of Phase Control (page 75). It is automatically set to **FULLBND** when Full Band Phase Control measurement is performed (page 76). You cannot select **FULLBND** before the measurement.	FULLBND **ON** OFF
PHASE C+ (Phase Control Plus)	For discs created with standards other than Phase Control, the LFE channel is delayed upon recording in the first place. This function corrects for phase shifting on such discs. This function is particularly effective when playing multi-channel music containing low frequency effects (LFE). When **AUTO** is selected, not only the low range delay but also the polarity and correlation are detected to achieve the optimum effect.	◄ AUTO/0 to 16 (ms) ► Default: **AUTO**
DELAY (Sound Delay)	Some monitors have a slight delay when showing video, so the soundtrack will be slightly out of sync with the picture. By adding a bit of delay, you can adjust the sound to match the presentation of the video.	◄ 0 to 800 (ms) ► Default: **0**
TONE (Tone Control)	Applies the treble and bass tone controls to a source, or bypasses them completely.	**BYPASS** ON
BASS <a>	Adjusts the amount of bass.	◄ –6 to +6 (dB) ► Default: **0** (dB)
TREBLE <a>	Adjusts the amount of treble.	◄ –6 to +6 (dB) ► Default: **0** (dB)
S.RTRV (Auto Sound Retriever) <b>	With the Auto Sound Retriever function, DSP processing is used to compensate for the loss of audio data upon compression, improving the sound's sense of density and modulation. Also, when a player supporting the Sound Retriever Link function is connected to the receiver by HDMI, by setting this to **ON**, the bitrate information of the compressed audio file being played on the player is acquired using the **Control** with HDMI function, and the sound is optimized based on this information (Sound Retriever Link).	OFF ON
DNR (Digital Noise Reduction)	May improve the quality of sound in a noisy source (for example, video tape with lots of background noise) when switched on. This only has an effect with 2-channel signal inputs. This mode is effective for contents with a sampling frequency of 48 kHz or less.	**OFF** ON
DIALOG E (Dialog Enhancement) <c>	Localizes dialog in the center channel to make it stand out from other background sounds in a TV or movie soundtrack. By moving from UP1 through UP2 and UP3 up to UP4, you can make the sound source seem to relocate upwards.	◄ OFF/FLAT/UP1/UP2/UP3/UP4 ► Default: **OFF**
AScale (Audio Scaler)	When **AUTO** is selected, **Hi-bit32**, **UpSampling** and **DFILTER** are automatically set to the optimum settings according to the 2-channel audio source's sampling frequency and bit rate to achieve high quality playback sound.	**MANUAL** AUTO
Hi-bit32 <d>	Creates a wider dynamic range with digital sources like CDs, DVDs or BDs. 16-, 20- and 24-bit PCM as well as compressed audio is requantized to 32 bits, and the high frequency component is interpolated upon data processing to enable smoother, more subtle musical expression. This mode is effective for contents with a sampling frequency of 48 kHz or less.	**ON** OFF
UpSampling (Up Sampling) <e> <f>	The 2-channel audio source's sampling frequency is increased to the set multiple to achieve high quality playback sound.	x1 (Off) x2 **x4**
DFILTER (Digital Filter) <e>	Switches the AUDIO DAC (Digital Audio Converter) digital filter type. One of two settings can be selected: **SLOW** (soft and warm), **SHARP** (solid and tight), **SHORT** (quick and forward).	SLOW **SHARP** SHORT
PQLS (Precision Quartz Lock System)	Switches the PQLS function between AUTO and OFF (Setting the PQLS function on page 87).	**AUTO** OFF
DUAL (Dual Mono)	Specifies how dual mono encoded Dolby Digital soundtracks should be played. Dual mono is not widely used, but is sometimes necessary when two languages need to be sent to separate channels.	**CH1** – Channel 1 is heard only CH2 – Channel 2 is heard only CH1 CH2 – Both channels heard from front speakers

Setting	What it does	Option(s)
SIGSEL (Signal Select)	Use to switch the input signal type (analog/digital/HDMI) (page 75).	**AUTO** ANALOG DIGITAL <g> HDMI
Fixed PCM	This is useful if you find there is a slight delay before **OFF** recognizes the PCM signal on a CD, for instance. When **ON** is selected, noise may be output during playback of non-PCM sources. Please select another input signal if this is a problem.	**OFF** ON
DRC (Dynamic Range Control) <h>	Adjusts the level of dynamic range for movie soundtracks optimized for Dolby Digital, DTS, Dolby Digital Plus, Dolby TrueHD, DTS-HD and DTS-HD Master Audio (you may need to use this feature when listening to surround sound at low volumes).	AUTO MAX MID **OFF**
Loud Mgmt (Loudness Management)	This is a setting of the post process function of the Dolby TrueHD decoder. By setting to OFF, you can enjoy higher sound quality. This can only be set when **DRC** is set to **OFF** and the input signal is a Dolby TrueHD signal.	**ON** OFF
LFE (LFE Attenuate)	Some audio sources include ultra-low bass tones. Set the LFE attenuator as necessary to prevent the ultra-low bass tones from distorting the sound from the speakers. When set to the recommended value of 0 dB, the LFE is not restricted. When set to a value other than 0 dB, the LFE is restricted to the set value. When OFF is selected, the sound is not output from the LFE channel.	◀ OFF/ –20dB/ –15dB/ –10dB/ –5dB/ –4dB/ –3dB/ –2dB/ –1dB/ 0dB ▶ Default: **0dB**
INPUT ATT (Input attenuate) <i>	If the sound is distorted, this can be used to lower the input signal level and reduce the distortion.	**OFF** ON
HDMI (HDMI Audio) <j>	Specifies the routing of the HDMI audio signal out of this receiver (amp) or through to a TV. When THROUGH is selected, no sound is output from this receiver.	**AMP** THROUGH
A.DELAY (Auto delay) <k>	This feature automatically corrects the audio-to-video delay between components connected with an HDMI cable. The audio delay time is set depending on the operational status of the display connected with an HDMI cable. The video delay time is automatically adjusted according to the audio delay time.	**OFF** ON
C.GAIN (Center Gain) (Applicable only when using a center speaker) <l>	Adjusts the center gain to create a wider stereo effect with vocals. Adjust the effect from 0 (all center channel sent to front right and left speakers) to 1.0 (center channel sent to the center speaker only).	◀ 0 to 1.0 ▶ Defaults: Neo:X CINEMA: **1.0** Neo:X MUSIC: **0.3** Neo:X GAME: **1.0**
EFFECT	Sets the effect level for the ALC mode.	◀ 10 to 90 ▶ Defaults: **50**
C.SPREAD (Center Spread) <m>	Center spread expands the center channel signal to the left and right front speakers to create a wider frontal audio image for the listener. It is optimized and designed primarily for playback of stereo music content.	ON OFF
V.SPs (Virtual Speakers)	When **AUTO** is selected, the sound field is created with the surround back and front wide channels whose **Speaker Setting** is set to **NO** automatically complemented. To set the respective channels individually, select **MANUAL**.	AUTO **MANUAL**

Setting	What it does	Option(s)
V.SB (Virtual Surround Back) <n>	When you're not using surround back speakers, selecting this mode allows you to hear a virtual surround back channel through your surround speakers. You can choose to listen to sources with no surround back channel information.	**OFF** ON
V.HEIGHT (Virtual Height) <o>	Settings to create virtual front height channel audio.	**OFF** ON
V.WIDE (Virtual Wide) <p>	When you're not using front wide speakers, selecting this mode allows you to hear a virtual front wide channel through your front speakers. This improves the continuity of the sound from the front channel to the surround channels.	**OFF** ON
AMP <q>	This is set to turn power amplifier sections off and use channels exclusively in the pre-amp mode. Select **ON** to use the power amplifiers for all channels. Select **Front OFF** to turn off the front channel's power amplifier and use the front channel exclusively in the pre-amp mode, **F&C OFF** to turn off the front and center channels' power amplifiers and use the front and center channels exclusively in the pre-amp mode. To turn the power amplifiers for all channels off and use them exclusively in the pre-amp mode, select **OFF**.	**ON** Front OFF F&C OFF OFF
RENDER (Rendering Mode) <r>	Allows you to choose which signal, object base (**OBJECT**) or channel base (**LEGACY**) to decode when playing back Dolby Atmos content.	**OBJECT** LEGACY

a The adjustment can be made only when **TONE** is set to **ON**.

b • The default value changes depending on the type of input (page 97).
• When **ON** is selected, the Sound Retriever effect is optimized based on the bitrate information of the contents input to the USB memory audio and **INTERNET RADIO**, **PANDORA**, **Spotify**, **MEDIA SERVER**, **FAVORITES** (digital audio input only) to achieve high sound quality.
• With the **iPod/USB**, **INTERNET RADIO**, **PANDORA**, **Spotify**, **MEDIA SERVER**, **FAVORITES** or **BT AUDIO** input function, by default **S.RTRV** is set to **ON**.
• When **ON** is selected, optimum correction of the audio signals input via the **HDMI OUT** terminal is conducted with the HDMI ARC (Audio Return Channel) function, and the sound of digital TV broadcasts is produced with HD quality. This is valid when the input is set to **TV** and **ARC** in **HDMI Setup** is set to **ON**. (See HDMI Setup on page 85.)

c UP1 to UP4 can be selected only when the front height speaker is connected. The presence or absence of effects depends on the listening mode.

d This function does not work when the sampling frequency is 32 kHz.

e • This can be set when **MANUAL** is selected for **AScale**.
• This function does not work when the sampling frequency is 32 kHz.

f This setting only affects 2-channel audio sources.

g On the front panel display, '**DIGITL**' is displayed.

h **AUTO** is only available for Dolby TrueHD signals. Select **MAX** or **MID** for signals other than Dolby TrueHD.

i • The attenuator isn't available when using the Stream Direct (ANALOG DIRECT) modes.
• The attenuator does not function when the listening mode is set to **PURE DIRECT** with AirPlay.

j • The HDMI Audio setting cannot be switched while performing synchronized amp mode operations.
• The synchronized amp mode must be turned on in order to play the receiver's HDMI audio and video input signals from the TV with the receiver's power in the standby mode. See About synchronized operations on page 86.

k This feature is only available when the connected display supports the automatic audio/video synchronizing capability ('lipsync') for HDMI. If you find the automatically set delay time unsuitable, set **A.DELAY** to **OFF** and adjust the delay time manually. For more details about the lipsync feature of your display, contact the manufacturer directly.

l Only when listening to 2-channel sources in Neo:X CINEMA/MUSIC/GAME mode.

m The default value changes depending on the type of input (page 97).

n • This can be set when **MANUAL** is selected for **V.SPs**.
• You can't use the Virtual Surround Back mode when the headphones are connected to this receiver or when any of the stereo, Front Stage Surround Advance, Sound Retriever Air or Stream Direct modes is selected.
• You can only use the Virtual Surround Back mode if the surround speakers are on and the **SB** setting is set to **NO** or if **5.2 Bi-Amp+HDZONE**, **5.2 +ZONE 2+ZONE 3**, **5.2 +ZONE 2+HDZONE**, **Multi-ZONE Music**, **5.2ch + SP-B Bi-Amp**, **5.2ch F+Surr Bi-Amp**, **5.2ch F+C Bi-Amp** or **5.2ch C+Surr Bi-Amp** is selected at **Speaker System**.
• This mode is effective for contents with a sampling frequency of 48 kHz or less.

o • This can be set when **MANUAL** is selected for **V.SPs**.
• You can't use the Virtual Height mode when the headphones are connected to this receiver or when any of the stereo, Front Stage Surround Advance, Sound Retriever Air or Stream Direct modes is selected.
• You can only use the Virtual Height mode if the surround speakers are on.
• This mode is effective for contents with a sampling frequency of 48 kHz or less.

p • This can be set when **MANUAL** is selected for **V.SPs**.
• You can't use the Virtual Wide mode when the headphones are connected to this receiver or when any of the stereo, Front Stage Surround Advance, Sound Retriever Air or Stream Direct modes is selected.
• You can only use the Virtual Wide mode if the surround speakers are on and the **FW** setting is set to **NO**. It can also not be used when playing signals containing actual front wide channel information.
• This mode is effective for contents with a sampling frequency of 48 kHz or less.

q • When **Speaker System** is set to **7.2.2ch Front Bi-Amp**, **5.2 Bi-Amp+HDZONE**, **5.2ch F+Surr Bi-Amp** or **5.2ch F+C Bi-Amp**, the **AMP** setting is locked at **ON** and cannot be changed.
• When **Speaker System** is set to **5.2ch C+Surr Bi-Amp**, only **ON** and **Front OFF** can be selected for the **AMP** setting.

r • When neither the top middle, surround back, or front wide speaker is connected, Dolby Atmos does not play.
• When **OBJECT** is selected, for non-Dolby Atmos contents, the listening mode can be switched to **Dolby Surround** (page 139).

Setting the Video options

There are a number of additional picture settings you can make using the **VIDEO PARAMETER** menu. The defaults, if not stated, are listed in bold.

Important

- When **MAIN/HDZONE** is set to **HDZONE**, the **VIDEO PARAMETER** menu setting works only for the signal of the **HDMI OUT 1** and **HDMI OUT 2** terminals.
  Also, when **HDZONE** is set to **ON**, **VIDEO PARAMETER** cannot be set (does not work).
- Note that if an option cannot be selected on the **VIDEO PARAMETER** menu, it is unavailable due to the current source, setting and status of the receiver.
- All of the setting items can be set for each input function.
  — However, with the audio only input function, **VIDEO PARAMETER** cannot be set.
  — Also, when **HDZONE** is set to **ON**, **VIDEO PARAMETER** cannot be set (does not work).
- Setting items other than **V.CONV** can only be selected when **V.CONV** is set to **ON**.

1 Press MAIN RECEIVER to switch the remote control to the receiver operation mode, and then press VIDEO P..

2 Use ⬆/⬇ to select the setting you want to adjust.

Depending on the current status/mode of the receiver, certain options may not be able to be selected. Check the table below for notes on this.

3 Use ⬅/➡ to set as necessary.

See the table below for the options available for each setting.

4 Press RETURN to confirm and exit the menu.

Video parameter menu

Setting	What it does	Option(s)
V.CONV (Digital Video Converter) <a>	Converts all video input signals so they can be output from the **HDMI OUT 1** and **HDMI OUT 2** terminals.	ON **OFF**
SCAL (Scaling) <b>	Specifies the output resolution of the video signal (when video input signals are output at the **HDMI OUT** terminals, select this according to the resolution of your monitor and the images you wish to watch).	**AUTO** PURE 480p 720p 1080i 1080p 1080/24p 4K 4K/24p
SUPER RES (Super resolution) <c>	Detailed feel of materials and accurate outlines are reproduced. Setting is made by selecting one of **0** (Off), **+1**, **+2** or **+3** and sharper images are delivered with greater values. **0** **+3** (The image is only an example for checking the effect.)	0 +1 **+2** +3
PCINEMA (PureCinema) <d> <e>	This setting optimizes the operation of the progressive scanning circuit for playing film materials. Normally set it to **AUTO**. If the picture seems unnatural, switch this to **ON** or **OFF**.	**AUTO** ON OFF
P.MOTION (Progressive Motion) <d> <e>	Adjusts the motion and still picture quality when video output is set to progressive.	◄ –4 to +4 ► Default: **0**
STREAM (Stream Smoother) <e>	This improves elements that reduce picture quality mainly noticeable in network contents, such as mosquito noise and block noise. When **AUTO** is selected, this unit's Stream Smoother function automatically turns on when network contents are played on the player supporting Stream Smoother Link and connected to this unit by HDMI (assuming that integrated operation with the Control with HDMI function is set). (Stream Smoother Link)	**OFF** ON AUTO
V.ADJ (Advanced Video Adjust)	Sets the optimum picture quality for the type of monitor that is connected. Select **PDP** for plasma displays, **LCD** for liquid crystal monitors, **FPJ** for front projectors, **PRO** for professional monitors. If you want to adjust the picture quality settings to your personal tastes, select **MEMORY**.	**PDP** LCD FPJ PRO MEMORY

Setting	What it does	Option(s)
YNR <e> <f>	Reduces noise in the luminance (Y) signal. ◀ ▶ (The image is only an example for checking the effect.)	◀ 0 to +8 ▶ Default: **0**
CNR <e> <f>	Reduces noise in the input's color (C) signal. ◀ ▶ (The image is only an example for checking the effect.)	◀ 0 to +8 ▶ Default: **0**
BNR <e> <f>	Reduces block noise (block-shaped distortion generated upon MPEG compression) in the picture. ◀ ▶ (The image is only an example for checking the effect.)	◀ 0 to +8 ▶ Default: **0**
MNR <e> <f>	Reduces mosquito noise (distortion generated at the contours of the picture upon MPEG compression) in the picture. ◀ ▶ (The image is only an example for checking the effect.)	◀ 0 to +8 ▶ Default: **0**
DETAIL <e> <f>	Adjusts how sharp edges appear. ◀ ▶ (The image is only an example for checking the effect.)	◀ 0 to +8 ▶ Default: **0**

Setting	What it does	Option(s)
BRIGHT (Brightness) <e> <f>	Adjusts the overall brightness. ◀ **0** ▶ (The image is only an example for checking the effect.)	◀ –6 to +6 ▶ Default: **0**
CONTRAST <e> <f>	Adjusts the contrast between light and dark. 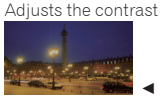 ◀ **0** ▶ (The image is only an example for checking the effect.)	◀ –6 to +6 ▶ Default: **0**
HUE <e> <f>	Adjusts the red/green balance. ◀ **0** ▶ (The image is only an example for checking the effect.)	◀ –6 to +6 ▶ Default: **0**
CHROMA (Chroma Level) <e> <f>	Adjusts saturation from dull to bright. ◀ **0** ▶ (The image is only an example for checking the effect.)	◀ –6 to +6 ▶ Default: **0**
BLK SETUP (Black Setup) <g>	Sets the black level according to the video input signal. Normally select **7.5**. If the dark parts of the picture are all black with this setting, select **0**.	0 **7.5**

Setting	What it does	Option(s)
ASP (Aspect) <h>	Specifies the aspect ratio when input signals are output at the HDMI output. Make your desired settings while checking each setting on your display (if the image doesn't match your monitor type, cropping or black bands appear).	**THROUGH** NORMAL

a • The default value changes depending on the type of input (page 97).
• If the video picture deteriorates when this settings is switched **ON**, switch it **OFF**.
• When connected with a video device using the component video input terminals, set this setting to **ON** and view the **HDMI OUT 1** or **HDMI OUT 2** terminal's video.
• When upscaling to 4K or 1080p, video may not be output correctly depending on the HDMI cable. In this case, set this setting to **OFF**.
b • When set to a resolution with which the TV (monitor) is not compatible, no picture is output. Also, in some cases no picture will be output due to copyright protection signals. In this case, change the setting.
• When **AUTO** is selected, the resolution is selected automatically according to the capacity of the TV (monitor) connected by HDMI. When **PURE** is selected, the signals are output with the same resolution as when input (see About the video converter on page 37).
• When **1080/24p** or **4K/24p** is selected, the movement may be unnatural or the picture unclear, depending on the video signal being input. In this case, set the resolution to something other than **1080/24p** or **4K/24p**.
• When **PURE** is selected and the input signal is 480i, the on-screen display cannot be displayed.
c This can only be set when **AUTO**, **4K**, or **4K/24p** is selected in **SCAL**. This is effective when upscaling to 4K from an input signal other than 4K.
d • **P.MOTION** is disabled when **PCINEMA** is set to **ON**.
• This setting have the effect only for pictures recorded in the interlaced scan format (480i/576i or 1080i signals).
e • This setting is only displayed when the video signals below are being input:
— 480i, 576i, 480p, 576p, 720p, 1080i analog video signals
— 480i, 576i, 480p, 576p, 720p, 1080i, 1080p, 1080p24 HDMI video signals
f Adjustment is not possible unless **V.ADJ** (Advanced Video Adjust) is set to **MEMORY**.
g This adjustment is only possible when 480i signals are being input from the composite video jacks.
h • If the image doesn't match your monitor type, adjust the aspect ratio on the source component or on the monitor.
• This setting is only displayed when 480i/p or 576i/p video signals are being input.

Switching the output (OUTPUT PARAMETER)

You can press **OUT P.** to switch the output of speaker terminals or HDMI terminals to be played.

Switching the speaker terminals

If you selected **9.2.2ch TMd/FH**, **7.2.2/7.2ch + SP-B** or **5.2ch + SP-B Bi-Amp** at Speaker system setting on page 113, you can switch between speakers using the **OUT P.** button.
If you selected **7.2.2/5.2.2/7.2ch**, **7.2.4ch SB Pre out**, **7.2.4ch Front Pre out**, **7.2.2ch Front Bi-Amp**, **7.2ch + HDZONE**, **5.2 Bi-Amp+HDZONE**, **5.2ch F+Surr Bi-Amp**, **5.2ch F+C Bi-Amp**, **5.2ch C+Surr Bi-Amp**, **Multi-ZONE Music**, **5.2 +ZONE 2+HDZONE** or **5.2 +ZONE 2+ZONE 3**, the button will simply switch your main speaker terminals on or off.

1 Press OUT P..
- You can perform the same operation by pressing **SPEAKERS** on the front panel.

2 Use ⬆/⬇ to select 'SP'.

3 Use ⬅/➡ to switch the speaker terminals to be played.

As mentioned above, if you have selected **7.2.2/5.2.2/7.2ch**, **7.2.4ch SB Pre out**, **7.2.4ch Front Pre out**, **7.2.2ch Front Bi-Amp**, **7.2ch + HDZONE**, **5.2 Bi-Amp+HDZONE**, **5.2ch F+Surr Bi-Amp**, **5.2ch F+C Bi-Amp**, **5.2ch C+Surr Bi-Amp**, **Multi-ZONE Music**, **5.2 +ZONE 2+HDZONE** or **5.2 +ZONE 2+ZONE 3**, the button will simply switch your main speaker terminal (A) on or off (Pre-AMP mode).

The pre-amp mode is a mode for reducing power consumption when power amplifiers are connected to the receiver's PRE OUT terminals by individually turning off the power of the amplifiers for those channels.
Press repeatedly to choose a speaker terminal option:
When you select **9.2.2ch TMd/FH**, *you can select from:*
- **SP: TMd/FH ON** – Top middle or front height channels are added to the front, center, surround and surround back channels (maximum 7 channels) and a maximum of 9 channels are output. The top middle and front height channels are switched automatically according to the audio input signal.
- **SP: TMd ON** – Top middle channels are added to the front, center, surround and surround back channels (maximum 7 channels) and a maximum of 9 channels are output.
- **SP: FH ON** – Front height channels are added to the front, center, surround and surround back channels (maximum 7 channels) and a maximum of 9 channels are output.
- **SP: OFF** – No sound is output from the speakers.

When you select **7.2.2/7.2ch + SP-B**, *you can select from:*
- **SP: A ON** – Sound is output from the A-speaker terminals (up to 9 channels (front, center, surround, surround back and top middle), depending on the source).
- **SP: B ON** – Sound is output from the two speakers connected to the B-speaker terminals (**EXTRA 1**). Multichannel sources will not be heard.
- **SP: A+B ON** – Sound is output from the A-speaker terminals (up to 7 channels (front, center, surround and surround back), depending on the source), the two speakers connected to the B-speaker terminals (**EXTRA 1**), and the subwoofer. The sound from the B-speaker terminals will be the same as the sound from the A-speaker terminals (multichannel sources will be downmixed to 2 channels).
- **SP: OFF** – No sound is output from the speakers.

When you select **5.2ch + SP-B Bi-Amp**, *you can select from:*
- **SP: A ON** – Sound is output from the A-speaker terminals (up to 5 channels (front, center and surround), depending on the source).
- **SP: B ON** – Sound is output from the two speakers connected to the B-speaker terminals (**EXTRA 1** and **SURROUND BACK**). Multichannel sources will not be heard.
- **SP: A+B ON** – Sound is output from the A-speaker terminals (up to 5 channels (front, center and surround), depending on the source), the two speakers connected to the B-speaker terminals (**EXTRA 1** and **SURROUND BACK**), and the subwoofer. The sound from the B-speaker terminals will be the same as the sound from the A-speaker terminals (multichannel sources will be downmixed to 2 channels).
- **SP: OFF** – No sound is output from the speakers.

Notes
- When **7.2.2/7.2ch + SP-B** or **5.2ch + SP-B Bi-Amp** is selected for the **Speaker System** setting (page 113) and **Speaker B Link** (HDMI Setup on page 85) is set to "ON", the setting of the speaker terminals that are played changes automatically when **HDMI OUT 1** and **HDMI OUT 2** are switched. For details, see Switching the HDMI output on page 94.
- The subwoofer output depends on the settings you made in Manual speaker setup on page 113. However, if **SP: B ON** is selected above, no sound is heard from the subwoofer (the LFE channel is not downmixed).
- All speaker systems (except **7.2.2/7.2ch + SP-B** connections) are switched off when headphones are connected.

Switching the HDMI output

Set which terminal to use when outputting video and audio signals from the HDMI output terminals.
The **HDMI OUT 1** terminal is compatible with the **Control** with HDMI function.

1 Press OUT P..

2 Use ⬆/⬇ to select 'OUT 1/2'.

3 Use ⬅/➡ to select the output settings for the HDMI OUT 1 and HDMI OUT 2 terminals.

Please wait a while when **Please wait ...** is displayed.
The output switches among **OUT 1+2**, **OUT 1**, **OUT 2** and **OFF** each time the button is pressed.

- The synchronized amp mode is canceled when the HDMI output is switched. If you wish to use the synchronized amp mode, switch to **OUT 1**, then select the synchronized amp mode on the TV using the TV's remote control.

4 Use ⬆/⬇ to select 'OUT 3'.

5 Use ⬅/➡ to select the output settings for the HDMI OUT 3 terminal.

Please wait a while when **Please wait ...** is displayed.
The setting switches between **ON** and **OFF** each time this is pressed.

- When **MAIN/HDZONE** is set to **HDZONE**, the output of the **HDMI OUT 3** terminal cannot be switched (page 117).

6 When you're finished, press RETURN.

About the Speaker B Link function

When **7.2.2/7.2ch + SP-B** or **5.2ch + SP-B Bi-Amp** is selected for the **Speaker System** setting (page 113) and **Speaker B Link** (HDMI Setup on page 85) is set to "ON", the setting of the speaker terminals that are played changes automatically when **HDMI OUT 1** and **HDMI OUT 2** are switched. The setting switches as follows.

- **OUT 1+2** – Switches to **SP: A+B ON**. Sound is output simultaneously in the room where the A speakers are located and in the room where the B speakers are located.
- **OUT 1** – Switches to **SP: A ON**. Sound is only output in the room where the A speakers are located.
- **OUT 2** – Switches to **SP: B ON**. Sound is only output in the room where the B speakers are located.

HDMI 4K/60p signal input setting

If the TV to be connected using HDMI supports 4K/60p, you can switch the 4K/60p signal input setting in accordance with TV performance.
Operation is performed on the front panel of the unit. You cannot perform the setting if the multizone function is not set to **MULTI ZONE OFF** (page 95).

1 Switch the receiver into standby.

2 While holding down ENTER on the front panel, press ⏻ STANDBY/ON.

The display shows **RESET ◄ NO ►**.

3 Select an input terminal that you wish to change settings using ⬆/⬇.

- **4K/60pBD** – Sets the signal for the **BD IN** terminal.
- **4K/60pH1** – Sets the signal for the **HDMI IN 1** terminal.
- **4K/60pH2** – Sets the signal for the **HDMI IN 2** terminal.

4 Use ⬅/➡ to select the signal to set.

- **4:4:4** – Select this setting when connecting to a 4K/60p 4:4:4 24 bit compatible TV using HDMI. More high quality video images can be enjoyed.
  - — When the HDMI cable does not support 4K/60p 4:4:4 24 bit (18 Gbps transmission), video image may not be output properly. In that case, select **4:2:0** to watch a 4K/60p 4:2:0 24 bit video image.
  - — When **4:4:4** is set for source equipment that does not support 4K/60p 4:4:4 24 bit, the source equipment's video output may turn red, audio may longer be output from the source equipment, and the equipment may no longer output 3D signals. If this applies to your equipment, change the setting to **4:2:0**.
  - — The **HDMI OUT 3** terminal does not output a 4K/60p 4:4:4 24 bit video image if **MAIN/HDZONE** is set to **HDZONE**.
- **4:2:0** – Select this setting when connecting to a 4K/60p 4:2:0 24 bit compatible TV using HDMI.

5 When you're finished, press RETURN.

6 Press ⏻ STANDBY/ON to switch on the receiver and your TV.

Make sure that the TV's video input is set to this receiver.

Changing the channel level while listening

Using the channel level settings, you can adjust the overall balance of your speaker system, an important factor when setting up a home theater system.

1 Press CH LV..

2 Use ⬆/⬇ to select the channel you wish to adjust.

3 Adjust the volume using ⬅/➡.

The volume can be adjusted in the range of **-12.0dB** to **+12.0dB**, 0.5 dB steps.

4 When you're finished, press RETURN.

Input Volume Absorber

This can be used to correct for the difference in volume between input sources.

1 Switch to the input whose volume you want to adjust.

2 Press CH LV..

3 Use ⬆/⬇ to select 'ALL'.

4 Adjust the volume using ⬅/➡.

The volume can be adjusted in the range of **-12.0dB** to **+12.0dB**, 0.5 dB steps.

5 When you're finished, press RETURN.

Using the MULTI-ZONE controls

The following steps use the front panel controls to adjust the sub zone volume and select sources. See ZONE 2 remote controls and HDZONE remote controls on page 95.

Important

- The settings must be changed at **ZONE Setup** in order to use the multi-zone function (page 117).

1 Press the button on the front panel for the zone you want to operate (ZONE 2 ON/OFF, ZONE 3 ON/OFF or HDZONE ON/OFF).

The zone switches between on and off each time the button is pressed.
The **MULTI-ZONE** indicator lights when the MULTI-ZONE control has been switched ON.

2 Press MULTI-ZONE CONTROL on the front panel to select the sub zone(s) you want.

- When the receiver is on, make sure that any operations for the sub zone are done while ZONE and your selected sub zone(s) show in the display. If this is not showing, the front panel controls affect the main zone only.
  If the receiver is in standby, the display is dimmed, and ZONE and your selected sub zone(s) continue to show in the display.

3 Use the INPUT SELECTOR dial to select the source for the sub zone.

For example, **ZONE 2 SAT/CBL** sends the source connected to the **SAT/CBL** inputs to the sub room (**ZONE 2**).

- If you select **TUNER**, you can use the tuner controls to select a preset station (see Saving station presets on page 69 if you're unsure how to do this). The tuner cannot be tuned to more than one station at a time. Therefore, changing the station in one zone also changes the station in the other zone. Please be careful not to change stations when recording a radio broadcast.

4 Use the MASTER VOLUME dial to adjust the volume for the sub zone.

When **Speaker System** is set to anything other than **5.2 +ZONE 2+ZONE 3**, **5.2 +ZONE 2+HDZONE** or **Multi-ZONE Music**, the volume output from the receiver's **AUDIO ZONE 2 OUT** terminals can be fixed to –40 dB or 0 dB and the volume can be adjusted from the connected amplifier. If you want to adjust the volume from the connected amplifier, see ZONE Setup on page 117.

5 When you're finished, press MULTI-ZONE CONTROL again to return to the main zone controls.

You can also press **MULTI-ZONE ON/OFF** on the front panel to switch off all output to the sub zone.

- You won't be able to switch the main zone off completely unless you've switched off the MULTI-ZONE control first.
- If you don't plan to use the MULTI-ZONE feature for a while, turn off the power in both the sub and main rooms so that this receiver is in standby.

Note

When HDZONE is turned on, the video converter function is disabled. For that reason, video connected with the video cable or component cable is not output from the HDMI terminal. To enable the video converter function, turn off HDZONE.

ZONE 2 remote controls

Before operation, hold down **Z2** on the remote control (for 1.5 seconds) until the remote control LED flashes one time.
The following table shows the possible ZONE 2 remote controls:

Button(s)	What it does
⏻	Switches on/off power in the sub zone.
ALL	Use to select the input function in the sub zone.
Input function buttons	Use to select the input function directly (this may not work for some functions) in the sub zone.
VOLUME +/– <a>	Use to set the listening volume in the sub zone.
MUTE <a>	Mutes the sound or restores the sound if it has been muted (adjusting the volume also restores the sound).

a The volume cannot be adjusted on the receiver if **Volume Level** at **ZONE 2 Setup** under **ZONE Setup** is set to **–40 dB Fixed** or **0 dB Fixed**.

ZONE 3 remote controls

Before operation, hold down **Z3** on the remote control (for 1.5 seconds) until the remote control LED flashes one time.
The following table shows the possible ZONE 3 remote controls:

Button(s)	What it does
⏻	Switches on/off power in the sub zone.
ALL	Use to select the input function in the sub zone.
Input function buttons	Use to select the input function directly (this may not work for some functions) in the sub zone.
VOLUME +/– <a>	Use to set the listening volume in the sub zone.
MUTE <a>	Mutes the sound or restores the sound if it has been muted (adjusting the volume also restores the sound).

a The volume cannot be adjusted on the receiver if **Volume Level** at **ZONE 3 Setup** under **ZONE Setup** is set to **–40 dB Fixed** or **0 dB Fixed**.

HDZONE remote controls

Before operation, hold down **HDZ** on the remote control (for 1.5 seconds) until the remote control LED flashes one time.
The following table shows the possible HDZONE remote controls:

Button(s)	What it does
⏻	Switches on/off power in the HDZONE.
ALL	Use to select the input function in the HDZONE.
Input function buttons	Use to select the input function directly (this may not work for some functions) in the HDZONE.
VOLUME +/– <a>	Use to set the listening volume in the HDZONE.
MUTE <a>	Mutes the sound or restores the sound if it has been muted (adjusting the volume also restores the sound).

a You can operate this only when **Speaker System** is set to **7.2ch + HDZONE**, **5.2 Bi-Amp+HDZONE** or **5.2 +ZONE 2+HDZONE**.

Making an audio or a video recording

You can make an audio or a video recording from the built-in tuner, or from an audio or video source connected to the receiver (such as a CD player or TV).
Keep in mind you can't make a digital recording from an analog source or vice-versa, so make sure the components you are recording to/from are hooked up in the same way (see Connecting your equipment on page 19 for more on connections).

- The receiver's volume, Audio parameters (the tone controls, for example), and surround effects have no effect on the recorded signal.
- Some digital sources are copy-protected, and can only be recorded in analog.
- Some video sources are copy-protected. These cannot be recorded.

Since the video converter is not available when making recordings (from the video **OUT** jacks) make sure to use the same type of video cable for connecting your recorder as you used to connect your video source (the one you want to record) to this receiver. For example, you must connect your recorder using Component video if your source has also been connected using Component video.

1 Select the source you want to record.
You can use the input function buttons on the remote control or the front panel **INPUT SELECTOR** dial.

2 Prepare the source you want to record.
Tune to the radio station, load the CD, video, DVD etc.

3 Select the input signal according to the signal to be recorded.
Use the remote control's **AUDIO P.** button.

4 Prepare the recorder.
Insert a blank tape, MD, video etc. into the recording device and set the recording levels. Refer to the instructions that came with the recorder if you are unsure how to do this. Most video recorders set the audio recording level automatically-check the component's instruction manual if you're unsure.

5 Start recording, then start playback of the source component.

Network settings from a web browser

Network settings and Pandora account settings can be made using the browser on a computer connected to the same LAN as the receiver.

1 Press ⏻ STANDBY/ON to switch on the receiver.

2 Turn on the computer's power and launch the Internet browser.

3 Input the receiver's IP address into the browser's address input field.
Access the IP address"http://(the receiver's IP address)" from a web browser. You can display the IP address of the unit on the unit's display by pressing the **STATUS** button on the remote control.
When connected with the receiver, the AVNavigator menu screen appears in the browser.

4 On the AVNavigator menu screen, select Network Setup.

5 Select the item you want to set.

Using the sleep timer

The sleep timer switches the receiver into standby after a specified amount of time so you can fall asleep without worrying about the receiver being left on all night. Use the remote control to set the sleep timer.

- **Press SLEEP repeatedly to set the sleep time.**

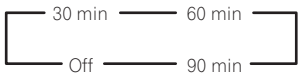

- You can check the remaining sleep time at any time by pressing **SLEEP** once. Pressing repeatedly will cycle through the sleep options again.
- The sleep timer is valid for all zones. If any zone is on, the sleep timer continues functioning.

Dimming the display

You can choose between four brightness levels for the front panel display. Note that when selecting sources, the display automatically brightens for a few seconds.
Turning off the display is effective for suppressing noise from the display that affects sound quality.

- **Press DIMMER repeatedly to change the brightness of the front panel display.**
- You can also choose to turn the display off. In this case, the **FL OFF** indicator lights.

Checking your system settings

Use the status display screen to check your current settings for features such as IP address and your current MCACC preset.

1 Press STATUS.

2 Use ⬆/⬇ to check the system setting.
The information on the main unit display switches as shown below each time one of the buttons is pressed.
IP address ⟷ Wi-Fi status (displays only when Wi-Fi is active) ⟷ Audio format ⟷ Sampling frequency ⟷ MCACC memory ⟷ Auto phase control plus correction value ⟷ Input source to be played in **ZONE 2** ⟷ Input source to be played in **ZONE 3** ⟷ Input source to be played in **HDZONE** ⟷ HDMI output setting ⟷ HDMI terminal to which **HDZONE** is output

- For some settings, some items are not displayed.
- When the auto phase control plus correction value displays '---', disks cannot be adjusted using **AUTO**. Please adjust manually (page 89).

3 When you're finished, press STATUS again to switch off the display.

Resetting the system

Use this procedure to reset all the receiver's settings to the factory default. Use the front panel controls to do this. Set MULTI-ZONE to **MULTI ZONE OFF**.

- Disconnect the iPod and USB memory device from the receiver beforehand.
- Set the **Control** with HDMI to **OFF** (see HDMI Setup on page 85).

1 Switch the receiver into standby.

2 While holding down ENTER on the front panel, press ⏻ STANDBY/ON.

The display shows **RESET ◄ NO ►**.

3 Select 'RESET' using PRESET ⬅/➡, then press ENTER on the front panel.

The display shows **RESET? OK**.

4 Press ENTER to confirm.

OK appears in the display to indicate that the receiver has been reset to the factory default settings.

- Note that all settings will be saved, even if the receiver is unplugged.

Default system settings

Setting		Default
SPEAKERS		**ON**
Speaker System		**7.2.2/5.2.2/7.2ch**
Speaker Setting	Front	**SMALL**
	Center	**SMALL**
	TMd/TFw/TBw	**SMALL**
	FH/FW	**SMALL**
	Surr	**SMALL**
	SB	**SMALLx2**
	SW	**SW1+2 YES**
Crossover		**80Hz**
X-Curve		**OFF**
DIMMER		Brightest
Inputs		
See Input function default and possible settings on page 61.		
Input Volume Absorber	All Inputs	**0dB**
HDMI		
HDMI Audio		**AMP**
Control		**OFF**
Control Mode		**---** (OFF)
ARC (Audio Return Channel)		**---** (OFF)
PQLS		**---** (AUTO)
Standby Through		**OFF**
4K/60pBD		**4:2:0**
4K/60pH1 (HDMI IN 1)		**4:2:0**
4K/60pH2 (HDMI IN 2)		**4:2:0**

Setting		Default
DSP		
Power On Level		**LAST**
Volume Limit		**OFF**
Mute Level		**FULL**
Phase Control		**ON**
Auto Sound Retriever	iPod/USB, INTERNET RADIO, PANDORA, Spotify, MEDIA SERVER, FAVORITES, BT AUDIO input function	**ON**
	Other input functions	**OFF**
Sound Delay		**0** ms
Dual Mono		**CH1**
DRC		**OFF**
LFE Attenuate		**0dB**
Auto delay		**OFF**
Digital Safety		**OFF**
Effect Level	ALC (Auto Level Control)	**50**
Center Spread		**OFF**
Neo:X Options	Center Gain	Neo:X CINEMA: **1.0** Neo:X MUSIC: **0.3** Neo:X GAME: **1.0**
All Inputs	Listening Mode (2 ch/multi ch)	**AUTO SURROUND**
	Listening Mode (Headphones)	**STEREO**
See also Setting the Audio options on page 89 for other default DSP settings.		
MCACC		
MCACC Position Memory		**M1. MEMORY 1**
Channel Level (M1 to M6)		0.0 dB
Speaker Distance (M1 to M6)		10'00''
Standing Wave (M1 to M6)	ATT of all channels/filters	0.0 dB
	SWch Wide Trim	0.0 dB
EQ Data (M1 to M6)	All channels/bands	0.0 dB
	EQ Wide Trim	0.0 dB
Network		
Network Standby		**ON**
DHCP		**ON**

Controlling the rest of your system

About the Remote Setup menu 99
Operating multiple receivers 99
Setting the remote to control other components 99
Selecting preset codes directly 99
Programming signals from other remote controls 100
Erasing one of the remote control button settings 100
Erasing all learnt settings that are in one input function 100
Using All Zone Standby 101
Setting the switching time for the receiver operation mode 101
Resetting the remote control settings 101
Controlling components 102

About the Remote Setup menu

The Remote Setup mode is set by pressing the number button while pressing **RCU SETUP**. The different items on the Remote Setup menu are described below. For their setting procedures, refer to the explanations for the respective items.

Setting	What it does
Change RC mode	If you have multiple Pioneer receivers, amplifiers, etc., this setting can be used to prevent other units from operating simultaneously when the remote control unit is operated. See Operating multiple receivers on page 99.
Preset recall	Preset codes can be set for the various input functions. The remote control codes of a number of other devices (including products of other brands) are preset in the remote control to allow these devices to be operated. See Selecting preset codes directly on page 99.
Code learning	If the desired operations cannot be performed even though you have set the preset codes, the remote control signals of other devices can be learned directly. See Programming signals from other remote controls on page 100.
Erase learning	This function is used to erase remote control codes that have been learned. Codes learned for the different input functions can be erased individually. See Erasing one of the remote control button settings on page 100.
Reset function	This is a function for resetting preset codes that have been set. Key resetting can be done for individual input functions. See Erasing all learnt settings that are in one input function on page 100.
Operation mode switching time	You can set to automatically switch to AV amplifier operation mode when a certain period of time elapses after remote operation of each input function is finished. See Setting the switching time for the receiver operation mode on page 101.
All reset	This is a function for resetting all remote control unit settings you have made to the defaults set upon shipment from the factory. See Resetting the remote control settings on page 101.

Notes

- You can cancel or exit any of the steps by pressing **RCU SETUP**.
- After one minute of inactivity, the remote automatically exits the operation.

Operating multiple receivers

Up to four receivers can be operated discretely using this receiver's remote control when using multiple receivers, provided they are of the same model as this receiver. The receiver to be operated is switched by inputting the preset code to set the remote control setting.

- Set the remote modes on the receivers before using this function (see Remote Control Mode Setup on page 117).

1 Press and hold RCU SETUP, then press '4' for three seconds.

Release the button after the LED flashes once. The LED continues to flash.

- To cancel the preset setup mode press **RCU SETUP**.

2 Press the number button for the receiver ("Receiver 1" to "Receiver 4") you wish to operate.

For example, to operate "Receiver 2", press '**2**'.
If the LED lights for one second, the setting has been successfully completed.
When the preset code is input, the LED flashes three times to indicate that the setting has failed.

Setting the remote to control other components

Most components can be assigned to one of the input function buttons (such as **DVD** or **CD**) using the component's manufacturer preset code stored in the remote.
However, there are cases where only certain functions may be controllable after assigning the proper preset code, or the codes for the manufacturer in the remote control will not work for the model that you are using.
If you can't find a preset code that matches the component you want to control, you can still teach the remote individual commands from another remote control (see Programming signals from other remote controls on page 100).

- With the **TV** buttons, the TV can be operated regardless of the input set for the remote control's operation mode. When using one TV set, we recommend assigning the same TV's preset codes to the **TV INPUT** button and the **TV** button. When using two TV sets, for better convenience assign the TV connected to the **MONITOR OUT** terminals to the **TV INPUT** button, the other TV to the **TV** button.
- Devices may be assigned to the following input function buttons.

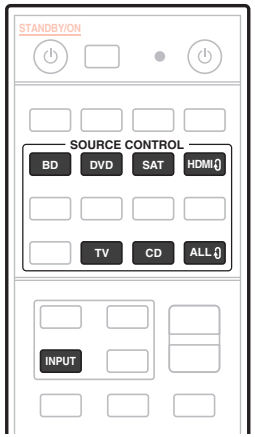

Selecting preset codes directly

1 Press and hold RCU SETUP, then press '1' for three seconds.

Release the button after the LED flashes once. The LED continues to flash.

- To cancel the preset setup mode press **RCU SETUP**.

2 Press the input function button for the component you want to control.

To assign the preset codes of the TV to be operated with the **TV** function, press the **TV INPUT** button.
The LED of the remote control lights.

3 Use the number buttons to enter the 4-digit preset code.

See Preset code list on page 148.
If the LED lights for one second and continues to flash, the setting has been successfully completed.
When the preset code is fully input, the LED flashes three times to indicate that the setting has failed. If this happens, enter the 4-digit preset code again.

4 Repeat steps 2 through 3 for the other components you want to control.

To try out the remote control, switch the component on or off (into standby) by pressing ⏻ **SOURCE**. If it doesn't seem to work, select the next code from the list (if there is one).

5 Press RCU SETUP to exit the preset setup mode.

Programming signals from other remote controls

If the preset code for your component is not available, or the available preset codes do not operate correctly, you can program signals from the remote control of another component. This can also be used to program additional operations (buttons not covered in the presets) after assigning a preset code.
The remote can store about 120 preset codes from other components (this has been tested with codes of Pioneer format only).
Certain buttons represent operations that cannot be learned from other remote controls. The buttons available are shown below:

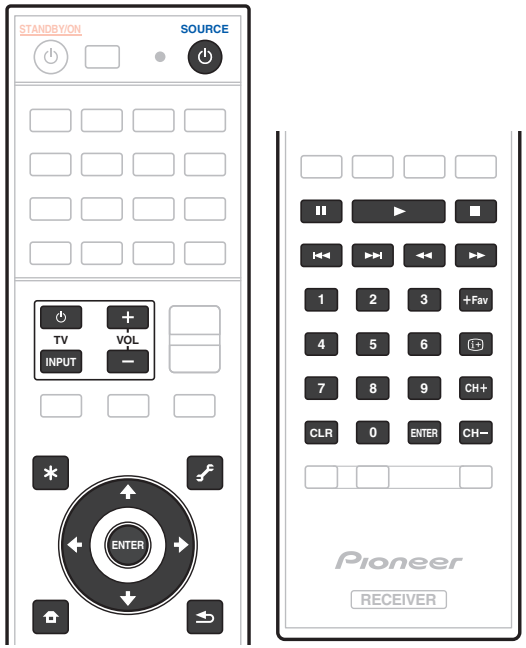

1 Press and hold RCU SETUP, then press '2' for three seconds.
Release the button after the LED flashes once. The LED continues to flash.
- To "learn" codes at the **TV** buttons, proceed to step 3.
- To cancel the preset setup mode press **RCU SETUP**.

2 Press the input function button for the component you want to control.
The LED blinks once and flashes continuously.

3 Point the two remote controls towards each other, then press the button that will be doing the learning on this receiver's remote control.
The LED flashes once, then stops flashing, remaining lit.

- The remote controls should be 3 cm (1 inch) apart.

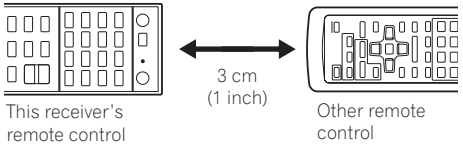

4 Press the corresponding button on the other remote control that is sending (teaching) the signal to this receiver's remote control.
If the LED lights for one second and continues to flash, the setting has been successfully completed.
- If the LED flashes for five seconds, it means the memory is full. See Erasing all learnt settings that are in one input function on page 100 to erase a programmed button you're not using to free up more memory (note that some signals may take more memory than others).
- Note that interference from TVs or other devices will sometimes result in the remote control learning the wrong signal.
- Some commands from other remote controls cannot be learned, but in most cases the remotes just need to be moved closer together or farther apart.

5 To program additional signals for the current component repeat steps 3 and 4.
To program signals for another component, exit and repeat steps 2 through 4.

6 Press RCU SETUP to exit the programming mode.

Erasing one of the remote control button settings

This erases one of the buttons you have programmed and restores the button to the factory default.

1 Press and hold RCU SETUP, then press '8' for three seconds.
Release the button after the LED flashes once. The LED continues to flash.
- To erase operations registered at the **TV** buttons, proceed to step 3.
- To cancel the preset setup mode press **RCU SETUP**.

2 Press the input function button corresponding to the command to be erased.
The LED flashes once.

3 Press and hold the button to be erased for three seconds.
If the LED lights for one second, the erasing has been successfully completed.

4 Repeat step 3 to erase other buttons.

5 Press RCU SETUP to exit the erasing mode.

Erasing all learnt settings that are in one input function

This operation erases all the operational settings of other devices that have been programmed in one input function, and restores the factory default.
This function is handy for erasing all data programmed for devices no longer being used.

1 Press and hold RCU SETUP, then press '9' for three seconds.
Release the button after the LED flashes once. The LED continues to flash.
- To cancel the preset setup mode press **RCU SETUP**.

2 Press and hold the input function button corresponding to the command to be erased for three seconds.
To erase the operations registered at all the **TV** buttons, press the **TV INPUT** button for 3 seconds.
If the LED lights for one second, the erasing has been successfully completed.

Using All Zone Standby

The All Zone Standby can be used to turn all zones to OFF when the receiver's power is switched to standby. Also, when using separate Pioneer amplifiers/receivers for the sub zones, they can also be set to standby simultaneously.

- In order to set the power of amplifiers/receivers connected to sub zones to the standby mode, the connected amplifiers/receivers must be installed or connected in such a way that they can receive remote control signals.
- The power of the amplifiers/receivers can be switched to standby with this operation even when using multiple Pioneer amplifiers/receivers and their **Remote Control Mode** have been changed.

1 Press ALL ZONE STBY.

The LED continues to flash.

2 Press ⏻ STANDBY/ON.

The receiver's power switches to standby and all zones are turned off.

Setting the switching time for the receiver operation mode

- Default setting: The AV amplifier operation mode is not switched automatically.

After pressing **SOURCE CONTROL** to operate another device, you need to press **MAIN RECEIVER** to switch the mode to receiver operation mode to operate this unit.

You can set to automatically switch to AV amplifier operation mode when a certain period of time elapses after remote operation of each input function is finished. See Setting the switching time for the receiver operation mode on page 101.

1 Press and hold RCU SETUP, then press '5' for three seconds.

The LED flashes once.

2 Press the number buttons of the time you wish to set.

- **1** – The mode is not automatically switched to AV amplifier operation mode.
- **2** – Switches in five minute.
- **3** – Switches in three minute.
- **4** – Switches in one minute.
- **5** – Switches in 30 seconds.

3 Press RCU SETUP to exit the setup.

Resetting the remote control settings

Use this procedure to reset all the remote control's settings to the factory default.

- When preset codes are set, all the signals learned in the input function buttons are cleared. This function is convenient when you want to reset some but not all of input function buttons.

1 Press and hold RCU SETUP, then press '0' for three seconds.

Release the button after the LED flashes once. The LED continues to flash.

2 Hold down the ENTER button for five seconds.

If the LED lights for one second, the erasing has been successfully completed.

Default preset codes

Input function button	Preset code
BD	2255
DVD	2197
HDMI	2144
TV	0305
CD	5000
SAT	6329
TV (INPUT)	0305
ALL	2034

Controlling components

This remote control can control components after entering the proper codes (see Setting the remote to control other components on page 99 for more on this). Use the input function buttons to select the component.

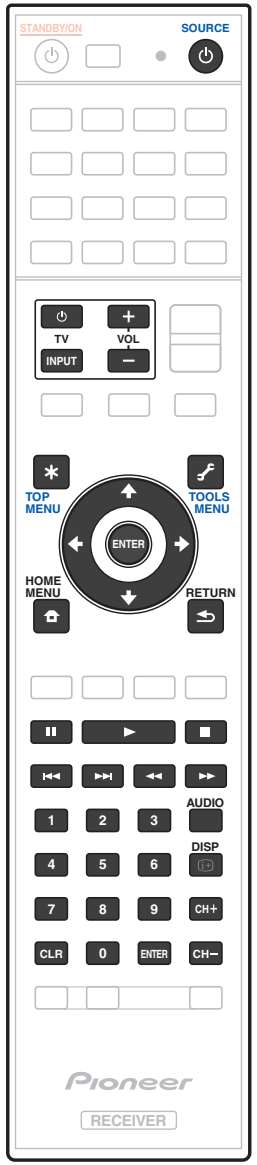

TV and Audio/Video components

Button(s)	TV	TV (Monitor)	BD/DVD	HDD/BDR/ DVR	VCR	SAT/CATV
⏻ SOURCE	POWER ON/OFF	POWER ON/OFF	POWER ON/OFF	POWER ON/OFF	POWER ON/OFF	POWER ON/OFF
Number buttons	*numerics*	*numerics*	*numerics*	*numerics*	*numerics*	*numerics*
CLR	• *(dot)*	KURO LINK	CLEAR	+	—	∗
ENTER (CLASS)	CH ENTER	CH ENTER	ENTER	ENTER	—	ENTER
∗	EXIT/INFO	EXIT	TOP MENU	TOP MENU	—	LIST
🔧	TOOLS/GUIDE/ EPG	USER MENU	TOOLS <a>	GUIDE	—	GUIDE
↑/↓/←/→	↑/↓/←/→	↑/↓/←/→	↑/↓/←/→	↑/↓/←/→	—	↑/↓/←/→
ENTER	ENTER	ENTER	ENTER	ENTER	—	ENTER
🏠	HOME MENU	HOME MENU	HOME MENU	HOME MENU	—	HOME MENU
↩	RETURN	RETURN	RETURN	RETURN	—	RETURN
▶	—	—	▶	▶	▶	▶
❚❚	—	AUTO SETUP	❚❚	❚❚	❚❚	❚❚
■	—	FREEZE	■	■	■	■
◀◀	—	—	◀◀	◀◀	◀◀	◀◀
▶▶	—	—	▶▶	▶▶	▶▶	▶▶
⏮	ANT	AV SELECTION	⏮	⏮	—	⏮
⏭	—	SCREEN SIZE	⏭	⏭	—	⏭
AUDIO	AUDIO	AUDIO	AUDIO	AUDIO	AUDIO	AUDIO
DISP	DISPLAY	DISPLAY	DISPLAY	DISPLAY	—	DISPLAY/INFO
CH +/–	CH +/–	CH +/–	Subtitle (CH +) Popup menu (CH –) <a>	Subtitle (CH +) or CH +/–	CH +/–	CH +/–

a Controls for BD.

Audio/Video components

Button(s)	LD	CD/CD-R/SACD	MD/DAT	TAPE
⏻ SOURCE	POWER ON/OFF	POWER ON/OFF	POWER ON/OFF	POWER ON/OFF
Number buttons	*numerics*	*numerics*	*numerics*	—
CLR	+10	>10/CLEAR	CLEAR <a>	CLEAR
ENTER (CLASS)	ENTER	DISC/ENTER	OPEN/CLOSE <a>	ENTER
✱	TOP MENU	—	—	MS←
🔧	—	LEGATO LINK <b>	—	MS→
⬆/⬇/⬅/➡	⬆/⬇/⬅/➡	—	—	❚❚/■/◀◀/▶▶
ENTER	ENTER	—	—	—
🏠	—	SACD SETUP <b>	—	—
↩	RETURN	—	—	—
▶	▶	▶	▶	▶
❚❚	❚❚	❚❚	❚❚	❚❚
■	■	■	■	■
◀◀	◀◀	◀◀	◀◀	◀◀
▶▶	▶▶	▶▶	▶▶	▶▶
❙◀◀	❙◀◀	❙◀◀	❙◀◀	❙◀◀
▶▶❙	▶▶❙	▶▶❙	▶▶❙	▶▶❙
AUDIO	AUDIO	PURE AUDIO <b>	—	—
DISP	DISPLAY/INFO	TIME <b>	—	—

a Controls for MD.
b Controls for SACD.

TV (Projector)

Button(s)	TV (Projector)
⏻ SOURCE	POWER ON
1	MOVIE
2	STANDARD
3	DYNAMIC
4	USER1
5	USER2
6	USER3
7	COLOR+
8	SHARP+
9	GAMMA
0	COLOR–
CLR	SHARP–
ENTER (CLASS)	COLOR TEMP
✱	EXIT
🔧	INFO
⬆/⬇/⬅/➡	⬆/⬇/⬅/➡
ENTER	ENTER
🏠	TEST
↩	HIDE
⤮	MENU
◀◀	HDMI1
▶	HDM 2
▶▶	COMP.
❙◀◀	VIDEO
❚❚	S-VIDEO
■	BRIGHT–
▶▶❙	BRIGHT+
AUDIO	POWER OFF
DISP	ASPECT
CH +/–	CONTRAST+/–

The MCACC PRO menu

Making receiver settings from the MCACC PRO menu 105
Automatic MCACC (Expert)..... 105
Manual MCACC setup 107
Checking MCACC Data 109
Data Management..... 110

Making receiver settings from the MCACC PRO menu

The MCACC (Multi Channel ACoustic Calibration) PRO system was developed in Pioneer's laboratories with the aim of making it possible for home users to perform adjustments of the same level as in a studio easily and with high precision. The acoustic characteristics of the listening environment are measured and the frequency response is calibrated accordingly to allow high precision, automatic analysis and optimal calibration of the sound field to bring it closer to a studio environment than ever before. Furthermore, while it was previously difficult to eliminate standing waves, this receiver is equipped with a standing wave control function using a unique process to perform acoustic analysis and reduce their influence.
This section describes how to calibrate the sound field automatically and fine-adjust the sound field data manually.

1 Press ⏻ STANDBY/ON to switch on the receiver and your TV.

Make sure that the TV's video input is set to this receiver.

2 Press MAIN RECEIVER to switch the remote control to the receiver operation mode, and then press HOME MENU.

A Graphical User Interface (GUI) screen appears on your TV. Use ⬆/⬇/⬅/➡ and **ENTER** to navigate through the screens and select menu items. Press **RETURN** to exit the current menu.

- Press **HOME MENU** at any time to exit the **HOME MENU**.

3 Select 'MCACC PRO' from the HOME MENU, then press ENTER.

4 Select the setting you want to adjust.

- **Full Auto MCACC** – See Automatically conducting optimum sound tuning (Full Auto MCACC) on page 59 for a quick and effective automatic surround setup.
- **Auto MCACC** – See Automatic MCACC (Expert) on page 105 for a more detailed MCACC setup.
- **Manual MCACC** – Fine-tunes your speaker settings and customizes the Acoustic Calibration EQ (see Manual MCACC setup on page 107).
- **MCACC Data Check** – This displays the MCACC PRO measurement results. Use it to check the MCACC memory. For details, see Checking MCACC Data on page 109.
- **Data Management** – Use this to manage the data in the MCACC memory. For details, see Data Management on page 110.
- **Demo** – No settings are saved and no errors occur. When the speakers are connected to this receiver, the test tone is output repeatedly. Press **RETURN** to cancel the test tone.

Automatic MCACC (Expert)

If your setup requires more detailed settings than those provided in Automatically conducting optimum sound tuning (Full Auto MCACC) on page 59, you can customize your setup options below. You can calibrate your system differently for up to six different MCACC presets, which are useful if you have different listening positions depending on the type of source (for example, watching movies from a sofa, or playing a video game close to the TV).

Important

- Make sure the microphone/speakers are not moved during the Auto MCACC Setup.
- The screen saver will automatically appear after five minutes of inactivity.

CAUTION

- The test tones used in the Auto MCACC Setup are output at high volume.

1 Select 'Auto MCACC' from the MCACC PRO menu, then press ENTER.

If the **MCACC PRO** screen is not displayed, refer to Making receiver settings from the MCACC PRO menu on page 105.

2 Select the parameters you want to set.

Use ⬆/⬇ to select the item, then use ⬅/➡ to set.

- **Auto MCACC** – The default is **ALL** (recommended), but you can limit the system calibration to only one setting (to save time) if you want.
  - — When data measurement is taken (after selecting **ALL** or **Keep SP System**), the reverb characteristics data (both before- and after-calibration) that this receiver had been storing will be overwritten.
  - — When measurement is performed with other than **SYMMETRY** (after selecting **ALL** or **Keep SP System**), the reverberation characteristics after calibration cannot be predicted, so the graph for the characteristics after calibration ("After") cannot be displayed. If you will need to display the graph for the characteristics after calibration ("After"), take the measurement using the **EQ Professional** menu in the **Manual MCACC** setup (page 107).
  - — The **EQ Pro & S-Wave** measurement is also taken when **ALL** or **Keep SP System** is selected. See Acoustic Calibration EQ Professional on page 108 for more on this.
  - — Either effect of Acoustic Calibration EQ Professional and Standing Wave can be switched on and off in the respective MCACC preset. For details, see Setting the Audio options on page 89.
- **EQ Type** (only available when the **Auto MCACC** Menu above is **EQ Pro & S-Wave**) – This determines how the frequency balance is adjusted.
  After a single calibration is performed, each of the following three correction curves can be stored separately in the MCACC memory.
  - — **SYMMETRY** implements symmetric correction for each pair of left and right speakers to flatten the frequency-amplitude characteristics.
  - — **ALL CH ADJ** is a 'flat' setting where all the speakers are set individually so no special weighting is given to any one channel.
  - — **FRONT ALIGN** sets all speakers in accordance with the front speaker settings (no equalization is applied to the front left and right channels).

  If you selected **ALL** or **Keep SP System** as your **Auto MCACC** menu, you can specify the MCACC preset where you want to save the **SYMMETRY**, **ALL CH ADJ** and **FRONT ALIGN** settings.
  EQ of subwoofer is automatically set when in **ALL CH ADJ** mode.
- **STAND.WAVE Multi-Point** (only available when the **Auto MCACC** Menu above is **EQ Pro & S-Wave**) – In addition to measurements at the listening position, you can use two more reference points for which test tones will be analyzed for standing waves. This is useful if you want to get a balanced 'flat' calibration for several seating positions in your listening area. Place the microphone at the reference point indicated on-screen and note that the last microphone placement will be at your main listening position:

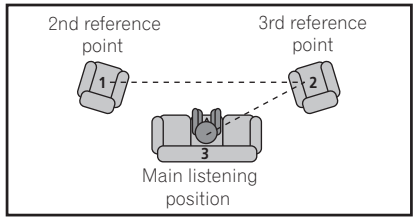

- **Dolby Enabled Speaker** (It can be set only when **ALL** and **Speaker Setting** are selected for **Auto MCACC**) – Select speakers that use Dolby Enabled Speaker (**TFw+TBw**, **TFw**, **TMd**, **TBw**). When Dolby Enabled Speaker is not used, select **NO** (page 21).
- **SP to ceiling** (When setting to use the Dolby Enabled Speaker, using **Auto MCACC**, you can perform the settings when **ALL**, **Keep SP System**, and **Channel Level & Speaker Distance** are selected): Input the vertical distance from the speaker to the ceiling when using a Dolby Enabled Speaker (page 21).

3 Connect the microphone to the MCACC SETUP MIC jack on the front panel.

Make sure there are no obstacles between the speakers and the microphone.

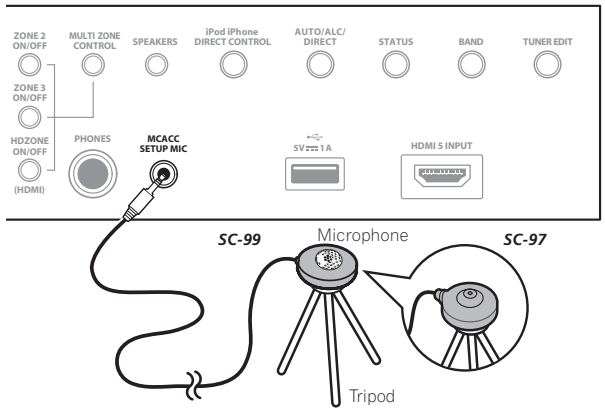

If you have a tripod, use it to place the microphone so that it's about ear level at your normal listening position. If you do not have a tripod, use some other object to install the microphone.

- It may not be possible to measure correctly if the microphone is placed on a table, sofa, etc.

4 When you're finished setting the options, select START then press ENTER.

5 Follow the instructions on-screen.

6 Wait for the Auto MCACC Setup to finish outputting test tones.

A progress report is displayed on-screen while the receiver outputs test tones to determine the speakers present in your setup. Try to be as quiet as possible while it's doing this.

- With error messages (such as **Too much ambient noise!** or **Check microphone.**), select **RETRY** after checking for ambient noise (see Problems when using the Auto MCACC Setup on page 61) and verifying the mic connection. If there doesn't seem to be a problem, you can simply select **GO NEXT** and continue.
- Do not adjust the volume during the test tones. This may result in incorrect speaker settings.

7 If necessary, confirm the speaker configuration in the GUI screen.

The configuration shown on-screen should reflect the actual speakers you have.
If no operations are performed for 10 seconds while the speaker configuration check screen is being displayed, the Auto MCACC Setup will resume automatically. In this case, you don't need to select '**OK**' and press **ENTER** in step 8.

- If you see an **ERR** message (or the speaker configuration displayed isn't correct), there may be a problem with the speaker connection. If selecting **RETRY** doesn't work, turn off the power and check the speaker connections. If there doesn't seem to be a problem, you can simply use ⬆/⬇ to select the speaker and ⬅/➡ to change the setting and continue.
- If the speaker is not pointed to the microphone (listening position) or when using speakers that affect the phase (dipole speakers, reflective speakers, etc.), **Reverse Phase** may be displayed even if the speakers are properly connected.
  If **Reverse Phase** is displayed, the speaker's wiring (+ and –) may be inverted. Check the speaker connections.
  — If the connections were wrong, turn off the power, disconnect the power cord, then reconnect properly. After this, perform the Auto MCACC procedure again.
  — If the connections were right, select **GO NEXT** and continue.

8 Make sure 'OK' is selected, then press ENTER.

A progress report is displayed on-screen while the receiver outputs more test tones to determine the optimum receiver settings.
Again, try to be as quiet as possible while this is happening. It may take 3 to 7 minutes.

- If you selected a **STAND.WAVE Multi-Point** setup (in step 2), you will be asked to place the mic at the 2nd and 3rd reference points before finally placing it at your main listening position.

9 The Auto MCACC Setup procedure is completed and the MCACC PRO menu reappears automatically.

The settings made in the Auto MCACC Setup should give you excellent surround sound from your system, but it is also possible to adjust these settings manually using the **Manual MCACC** setup menu (starting below) or **Manual SP Setup** menu (starting on page 113).

- Depending on the characteristics of your room, sometimes identical speakers with cone sizes of around 12 cm (5 inches) will end up with different size settings. You can correct the setting manually using the Manual speaker setup on page 113.
- The subwoofer distance setting may be farther than the actual distance from the listening position. This setting should be accurate (taking delay and room characteristics into account) and generally does not need to be changed.
- If Auto MCACC Setup measurement results are incorrect due to the interaction of the speakers and viewing environment, we recommend adjusting the settings manually.

You can also choose to view the settings by selecting individual parameters from the **MCACC Data Check** screen (see Checking MCACC Data on page 109).
Press **RETURN** after you have finished checking each screen. When you're finished, select **RETURN** to go back to the **HOME MENU**.
Be sure to disconnect the microphone from this receiver upon completion of the Auto MCACC Setup.

Manual MCACC setup

You can use the settings in the **Manual MCACC** setup menu to make detailed adjustments when you're more familiar with the system. Before making these settings, you should have already completed Automatically conducting optimum sound tuning (Full Auto MCACC) on page 59.
You only need to make these settings once (unless you change the placement of your current speaker system or add new speakers).

CAUTION
- The test tones used in the **Manual MCACC** setup are output at high volume.

Important
- Press the **MCACC** button while the pertinent setup screens are displayed to select MCACC presets.
- For some of the settings below, you'll have to connect the setup microphone to the front panel and place it about ear level at your normal listening position. Press **HOME MENU** to display the **HOME MENU** before you connect the microphone to this receiver.
- See Problems when using the Auto MCACC Setup on page 61 for notes regarding high background noise levels and other possible interference.
- If you're using a subwoofer, switch it on and turn up the volume to the middle position.

1 Select 'Manual MCACC' from the MCACC PRO menu.
See Making receiver settings from the MCACC PRO menu on page 105 if you're not already at this screen.

2 Select the setting you want to adjust.
If you're doing this for the first time, you might want to make these settings in order.
- **Fine Channel Level** – Make fine adjustments to the overall balance of your speaker system (see Fine Channel Level on page 107).
- **Fine SP Distance** – Make precise delay settings for your speaker system (see Fine Speaker Distance on page 107).
- **Standing Wave** – Control overly resonant low frequencies in your listening room (see Standing Wave on page 108).

The last two settings are specifically for customizing the parameters explained in Acoustic Calibration EQ Adjust on page 108:
- **EQ Adjust** – Manually adjust the frequency balance of your speaker system while listening to test tones (see Acoustic Calibration EQ Adjust on page 108).
- **EQ Professional** – Calibrate your system based on the direct sound coming from the speakers and make detailed settings according to your room's reverb characteristics (see Acoustic Calibration EQ Professional on page 108).
- **Precision Distance** *(SC-99 only)* – Fine-adjusting the positions of the speakers (see Precision Distance on page 109).

Fine Channel Level

- Default setting: **0.0dB** (all channels)

You can achieve better surround sound by properly adjusting the overall balance of your speaker system. You can adjust the Channel Level of each speaker in 0.5 dB increments. The following setting can help you make detailed adjustments that you may not achieve using the Manual speaker setup on page 113.

1 Select 'Fine Channel Level' from the Manual MCACC setup menu.
The volume increases to the 0.0 dB reference level.

2 Adjust the level of the left channel.
This will be the reference speaker level, so you may want to keep the level around **0.0dB** so that you'll have plenty of room to adjust the other speaker levels.
- After pressing **ENTER**, test tones will be output.

3 Select each channel in turn and adjust the levels (+/–12.0 dB) as necessary.
Use ⬅/➡ to adjust the volume of the speaker you selected to match the reference speaker. When it sounds like both tones are the same volume, press ⬇ to confirm and continue to the next channel.
- For comparison purposes, the reference speaker will change depending on which speaker you select.
- If you want to go back and adjust a channel, simply use ⬆/⬇ to select it.

4 When you're finished, press RETURN.
You will return to the **Manual MCACC** setup menu.

Fine Speaker Distance

- Default setting: **10'00''** (all speakers)

For proper sound depth and separation with your system, it is necessary to add a slight bit of delay to some speakers so that all sounds will arrive at the listening position at the same time. You can adjust the distance of each speaker in half inch increments. The following setting can help you make detailed adjustments that you may not achieve using the Manual speaker setup on page 113.

1 Select 'Fine SP Distance' from the Manual MCACC setup menu.

2 Adjust the distance of the left channel from the listening position.
When setting the Dolby Enabled Speaker, input the vertical distance from the speaker to the ceiling and the distance to each Dolby Enabled Speaker from the listening/viewing position (page 21).

3 Select each channel in turn and adjust the distance as necessary.
Use ⬅/➡ to adjust the delay of the speaker you selected to match the reference speaker. (If Dolby Enabled Speaker is used, the distance reached by the speaker sound reflected at the ceiling is displayed (page 21).)
Listen to the reference speaker and use it to measure the target channel. From the listening position, face the two speakers with your arms outstretched pointing at each speaker. Try to make the two tones sound as if they are arriving simultaneously at a position slightly in front of you and between your arm span.
- If you can't seem to achieve this by adjusting the distance setting, you may need to change the angle of your speakers very slightly.
- The subwoofer's test tone differs in tone from other channels. Adjust so that the sound of the subwoofer can be heard distinctly. Note that when adjusting the subwoofer, depending on the low frequency response of your speaker, it may be difficult to hear the change even when the setting is increased or decreased or when the position of the speaker is changed. Note that it may be difficult to compare this tone with the other speakers in your setup (depending on the low frequency response of the reference speaker).

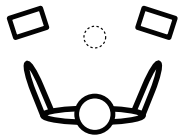

When it sounds like the delay settings are matched up, press ⬇ to confirm and continue to the next channel.
- For comparison purposes, the reference speaker will change depending on which speaker you select.
- If you want to go back and adjust a channel, simply use ⬆/⬇ to select it.

4 When you're finished, press RETURN.
You will return to the **Manual MCACC** setup menu.

Standing Wave

- Default setting: **ON**/**ATT 0.0dB** (all filters)

Acoustic standing waves occur when, under certain conditions, sound waves from your speaker system resonate mutually with sound waves reflected off the walls in your listening area. This can have a negative effect on the overall sound, especially at certain lower frequencies. Depending on speaker placement, your listening position, and ultimately the shape of your room, it results in an overly resonant ('boomy') sound. The Standing Wave Control uses filters to reduce the effect of overly resonant sounds in your listening area. During playback of a source, you can customize the filters used for Standing Wave Control for each of your MCACC presets.

- Standing Wave control filter settings cannot be changed during playback of sources using the HDMI connection.

1 Select 'Standing Wave' from the Manual MCACC setup menu.

2 Adjust the parameters for the Standing Wave Control.

- **Filter Channel** – Select the channel to which you will apply the filter(s): **MAIN** (all except center channel and subwoofer), **Center** or **SW** (subwoofer).
- **TRIM** (only available when the filter channel above is **SW**) – Adjust the subwoofer channel level (to compensate for the difference in output post-filter).
- **Freq** / **Q** / **ATT** – These are the filter parameters where **Freq** represents the frequency you will be targeting and **Q** is the bandwidth (the higher the Q, the narrower the bandwidth, or range) of the attenuation (**ATT**, the amount of reduction to the targeted frequency).

3 When you're finished, press RETURN.

You will return to the **Manual MCACC** setup menu.

Acoustic Calibration EQ Adjust

- Default setting: **ON**/**0.0dB** (all channels/bands)

Acoustic Calibration Equalization is a kind of room equalizer for your speakers (excluding the subwoofer). It works by measuring the acoustic characteristics of your room and neutralizing the ambient characteristics that can color the original source material (providing a 'flat' equalization setting). If you're not satisfied with the adjustment provided in Automatically conducting optimum sound tuning (Full Auto MCACC) on page 59 or Automatic MCACC (Expert) on page 105, you can also adjust these settings manually to get a frequency balance that suits your tastes.

1 Select 'EQ Adjust' from the Manual MCACC setup menu.

2 Select the channel(s) you want and adjust to your liking.

Use ⬆/⬇ to select the channel.

Use ⬅/➡ to select the frequency and ⬆/⬇ to boost or cut the EQ. When you're finished, go back to the top of the screen and press ⬅ to return to **Ch**, then use ⬆/⬇ to select the channel.

- The **OVER!** indicator shows in the display if the frequency adjustment is too drastic and might distort. If this happens, bring the level down until **OVER!** disappears from the display.

3 When you're finished, press RETURN.

You will return to the **Manual MCACC** setup menu.

Notes

- Changing the frequency curve of one channel too drastically will affect the overall balance. If the speaker balance seems uneven, you can raise or lower channel levels using test tones with the **TRIM** feature. Use ⬅/➡ to select **TRIM**, then use ⬆/⬇ to raise or lower the channel level for the current speaker.
- **Speaker Setting** channels set as **SMALL** or **Dolby Sp** at **63Hz** cannot be selected.
- The frequencies that can be adjusted by the **SW** channel are **31Hz**, **63Hz**, **125Hz** and **250Hz**.
- Depending on the crossover frequency setting, some frequencies are less effective.

Acoustic Calibration EQ Professional

This setup minimizes the unwanted effects of room reverberation by allowing you to calibrate your system based on the direct sound coming from the speakers.

Performing the Acoustic Calibration EQ Professional procedure is effective when the lower frequencies seem overly reverberant in your listening room (i.e. it sounds 'boomy) as shown at Type A below, or when different channels seem to exhibit different reverb characteristics as shown at Type B.

- **Type A: Reverberance of high vs. low frequencies**

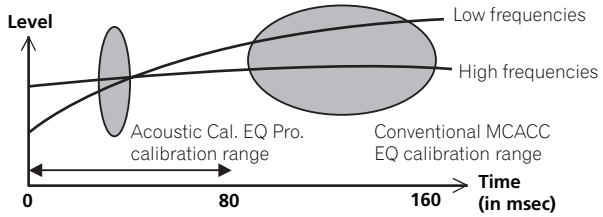

- **Type B: Reverb characteristics for different channels**

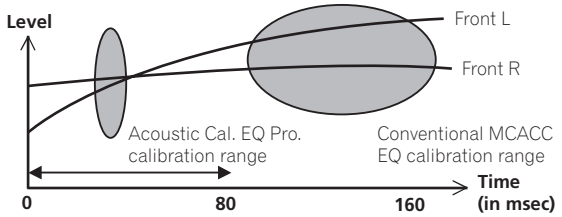

Using Acoustic Calibration EQ Professional

1 Select 'EQ Professional', then press ENTER.

2 Select an option and press ENTER.

- **Reverb Measurement** – Use this to measure the reverb characteristics before and after calibration.
- **Reverb View** – You can check the reverb measurements made for specified frequency ranges in each channel.
  — If the **Reverb View** procedure is performed after the **Reverb Measurement** operation, depending on the standing wave control setting, differences may appear on the reverb graph. With the **Auto MCACC** function, the reverberations are measured with the standing waves controlled, so the reverb characteristics graph shows the characteristics with the effect of the standing waves eliminated. By contrast, the **Reverb Measurement** function measures the reverberations without controlling the standing waves, so the graph indicates the reverb characteristics including the effect of the standing waves. If you wish to check the reverb characteristics of the room itself (with the standing waves as such), we recommend using the **Reverb Measurement** function.
- **Advanced EQ Setup** – Use this to select the time period that will be used for frequency adjustment and calibration, based on the reverb measurement of your listening area. Note that customizing system calibration using this setup will alter the settings you made in Automatically conducting optimum sound tuning (Full Auto MCACC) on page 59 or Automatic MCACC (Expert) on page 105 and is not necessary if you're satisfied with these settings.

3 If you selected 'Reverb Measurement', select EQ ON or EQ OFF, and then START.

The following options determine how the reverb characteristics of your listening area are displayed in **Reverb View**:

- **EQ OFF** – You will see the reverb characteristics of your listening area without the equalization performed by this receiver (before calibration).
- **EQ ON** – You will see the reverb characteristics of your listening area with the equalization performed by this receiver (after calibration). Note that the EQ response may not appear entirely flat due to adjustments necessary for your listening area.
  - — The calibration corresponding to the currently selected MCACC preset will be used when **EQ ON** is selected. To use another MCACC preset, press **MCACC** to select the MCACC memory you want to store.
  - — After auto calibration with **EQ Type** : **SYMMETRY** (**Full Auto MCACC**, etc.), the graph for the inferred reverb characteristics can be displayed by selecting **Reverb View**. To display the actually measured reverb characteristics after EQ calibration, measure with **EQ ON**.

When the reverb measurement is finished, you can select **Reverb View** to see the results on-screen. See Professional Calibration EQ graphical output on page 125 for troubleshooting information.

4 If you selected 'Reverb View', you can check the reverb characteristics for each channel. Press RETURN when you're done.

The reverb characteristics are displayed when the **Reverb Measurement** measurements are conducted.
Use ⬅/➡ to select the channel, frequency and calibration setting you want to check. Use ⬆/⬇ to go back and forth between the three. The reverb characteristics graph before and after EQ calibration can be displayed by selecting **Calibration** : **Before** / **After**. Note that the markers on the vertical axis indicate decibels in 2 dB steps.

5 If 'Advanced EQ Setup' is selected, select the MCACC memory to be stored, then enter the desired time setting for calibration, and then select START.

- To specify the place where the MCACC memory is to be stored, press **MCACC** to select the MCACC memory you want to store.

Based on the reverb measurement above, you can choose the time period that will be used for the final frequency adjustment and calibration. Even though you can make this setting without reverb measurement, it is best to use the measurement results as a reference for your time setting. For an optimal system calibration based on the direct sound coming from the speakers, we recommend using the **30-50ms** setting.
Use ⬅/➡ to select the setting. Use ⬆/⬇ to switch between them.
Select the setting from the following time periods (in milliseconds): **0-20ms**, **10-30ms**, **20-40ms**, **30-50ms**, **40-60ms**, **50-70ms** and **60-80ms**. This setting will be applied to all channels during calibration.
When you're finished, select **START**. It will take about 2 to 4 minutes for the calibration to finish.
After the Acoustic Calibration Equalization is set, you are given the option to check the settings on-screen.

Precision Distance

SC-99 only

Before using this function, perform the Full Auto MCACC Setup procedure (see page 59). Performing the Full Auto MCACC procedure corrects the distance to a precision of 0.5 inch, but the Precision Distance function lets you adjust the distance to the speakers (their position) with a precision of under 0.5 inch. Here, rather than correct the numerical value of the distance, actually move the physical positions of the speakers to fine-adjust (the subwoofer cannot be adjusted). The input from the microphone is indicated on the screen. Fine-adjust the positions of the speakers so that the gauge reading is maximum. The detailed distance adjustments that were previously performed by skilled installers by ear can easily be performed watching the gauge on the monitor. Place the microphone in the same position as when the microphone was connected and the Full Auto MCACC operation was performed.

1 Select 'Precision Distance' from the Manual MCACC setup menu.

2 Fine-adjust the positions of the speakers in sequence, starting from the front right channel.

Test pulses are output from the speaker for the selected channel and from one other speaker. Move the position of the selected speaker 0.5 inch towards or away from the microphone. Watch the screen when doing so, and fine-adjust the positions of the speakers so that the gauge reading is maximum. Also, the channel serving as the standard differs according to the channel being adjusted. Do not move the speaker serving as the standard channel.
The maximum gauge reading is 10.0. (If the reading stays under 10.0, adjust the speaker for the maximum value.)

- If the microphone is placed in a different position from when the **Full Auto MCACC** or **Auto MCACC** procedure was performed, it may not be possible to adjust properly. In this case, we recommend performing the procedure at Fine Speaker Distance on page 107 in the **Manual MCACC** measurements, then performing the adjustment described here without moving the microphone.
- The adjustment here is for adjusting for an error of 0.5 inch or less (not adjustable with the Auto MCACC Setup). 0.0 may be displayed after distance correction with the Auto MCACC Setup, but even in this case this adjustment allows you to optimize the correction. Note that if the Auto MCACC Setup is performed after completing the fine-adjustment here, the correction precision will drop to about 0.5 inch.
- Like with the Auto MCACC Setup, perform this adjustment in as quiet an environment as possible. 0.0 will be displayed if abrupt noise is input during the adjustment.
- The distance for all the channels can only be made uniform even if the **R** (front right) channel is adjusted in the proper order.
- Be very careful not to tip the speakers over when moving them.
- The result of the adjustment performed here can be checked by listening to the test pulses output at the Precision Distance (the test pulses will be more centrally positioned between the speakers than before the adjustment was performed). Be careful not to change the distance values at this time.

3 When you're finished, press RETURN.

You will return to the **Manual MCACC** setup menu.

Checking MCACC Data

At the procedure of Automatically conducting optimum sound tuning (Full Auto MCACC) on page 59, the procedure of Automatic MCACC (Expert) on page 105 or after fine-adjusting at Manual MCACC setup on page 107, you can check your calibrated settings using the GUI screen.

1 Select 'MCACC Data Check' from the MCACC PRO menu, then press ENTER.

2 Select the setting you want to check.

- **Speaker Setting** – Used to check the settings of the speaker systems. See Speaker Setting on page 110 for more on this.
- **Channel Level** – Used to check the output level of the different speakers. See Channel Level on page 110 for more on this.
- **Speaker Distance** – Used to check the distance to the different speakers. See Speaker Distance on page 110 for more on this.
- **Standing Wave** – Used to check the standing wave control filter settings. See Standing Wave on page 110 for more on this.
- **Acoustic Cal EQ** – Used to check the calibration values of the listening environment's frequency response. See Acoustic Cal EQ on page 110 for more on this.
- **Group Delay** – Used to check the speakers' group delay (both before and after calibration). See Group Delay on page 110 for more on this.

3 Press RETURN to go back to the MCACC Data Check menu, repeating steps 2 and 3 to check other settings.

4 When you're finished, press RETURN.

You will return to the **MCACC PRO** menu.

Speaker Setting

Use this to display the speaker size and number of speakers. See Speaker Setting on page 114 for more on this.

1 Select 'Speaker Setting' from the MCACC Data Check menu.

2 Select the channel you want to check.

Use ⬆/⬇ to select the channel. The corresponding channel on the layout diagram is highlighted.

Channel Level

Use this to display the level of the various channels. See Channel Level on page 115 for more on this.

1 Select 'Channel Level' from the MCACC Data Check menu.

2 When 'MCACC' is highlighted, use ⬅/➡ to select the MCACC preset you want to check.

The level of the various channels set at the selected MCACC preset is displayed. '**---**' is displayed for channels that are not connected.

Speaker Distance

Use this to display the distance from the different channels to the listening position. See Speaker Distance on page 115 for more on this.

1 Select 'Speaker Distance' from the MCACC Data Check menu.

2 When 'MCACC' is highlighted, use ⬅/➡ to select the MCACC preset you want to check.

The distance from the various channels set at the selected MCACC preset is displayed. '**---**' is displayed for channels that are not connected.

Standing Wave

Use this to display the standing wave related adjustment values for the various MCACC memories. See Standing Wave on page 108 for more on this.

1 Select 'Standing Wave' from the MCACC Data Check menu.

2 When 'Filter Channel' is highlighted, use ⬆/⬇ to select the channel for which you want to check standing wave control.

The standing wave related calibration value for the selected channel stored at the selected MCACC preset and its graph are displayed.

3 Press ⬅ to highlight 'MCACC', then use ⬆/⬇ to select the MCACC preset you want to check.

Acoustic Cal EQ

Use this to display the calibration values for the frequency response of the various channels set in the different MCACC presets. See Acoustic Calibration EQ Adjust on page 108 for more on this.

1 Select 'Acoustic Cal EQ' from the MCACC Data Check menu.

2 When 'Ch' is highlighted, use ⬆/⬇ to select the channel.

The calibration value for the frequency response of the selected channel stored at the selected MCACC preset and its graph are displayed.

3 Press ⬅ to highlight 'MCACC', then use ⬆/⬇ to select the MCACC preset you want to check.

Group Delay

Use this to display the calibrated speaker group delay results. See Better sound using Phase Control on page 75 for more on this.

1 Select 'Group Delay' from the MCACC Data Check menu.

2 When 'Channel' is highlighted, use ⬅/➡ to select the channel you want to check.

The result of group delay calibration for the selected channel is displayed.
When measurements have been performed with **Full Auto MCACC** selected at **MCACC PRO** or with **ALL** or **Full Band Phase Ctrl** selected when **Auto MCACC** is selected, the graph before group delay calibration is also displayed.
When **After** is selected at **Calibration**, the group delay after calibration is displayed. Compared to when **Before** is selected, with **After** there is less difference in the delay between frequency bands and the group delay between the different channels is uniform, allowing you to check the full band phase control effect.
No Data is displayed if the selected group delay has not been measured.

Data Management

This system allows you to store up to six MCACC presets, allowing you to calibrate your system for different listening positions (or frequency adjustments for the same listening position). This is useful for alternate settings to match the kind of source you're listening to and where you're sitting (for example, watching movies from a sofa, or playing a video game close to the TV).
From this menu you can copy from one preset to another, name presets for easier identification and clear any ones you don't need.

- This can be done in Automatically conducting optimum sound tuning (Full Auto MCACC) on page 59 or Automatic MCACC (Expert) on page 105, either of which you should have already completed.

1 Select 'Data Management' from the MCACC PRO menu, then press ENTER.

2 Select the setting you want to adjust.

- **Memory Rename** – Name your MCACC presets for easy identification (see Renaming MCACC presets on page 110).
- **MCACC Memory Copy** – Copy settings from one MCACC preset to another (see Copying MCACC preset data on page 111).
- **MCACC Memory Clear** – Clear any MCACC presets that you don't want (see Clearing MCACC presets on page 111).

Renaming MCACC presets

If you have several different MCACC presets that you're using, you may want to rename them for easier identification.

1 Select 'Memory Rename' from the Data Management setup menu.

2 Select the MCACC preset you want to rename, then select an appropriate preset name.

Use ⬆/⬇ to select the preset, then ⬅/➡ to select a preset name.

3 Repeat for as many MCACC presets as necessary, then press RETURN when you're finished.

You will return to the **Data Management** setup menu.

Copying MCACC preset data

If you want to manually adjust the Acoustic Calibration EQ (see Manual MCACC setup on page 107), we recommend copying your current settings to an unused MCACC preset. Instead of just a flat EQ curve, this will give you a reference point from which to start.

- The settings made in Automatically conducting optimum sound tuning (Full Auto MCACC) on page 59 or Automatic MCACC (Expert) on page 105.

1 Select 'MCACC Memory Copy' from the Data Management setup menu.

2 Select the setting you want to copy.

- **All Data** – Copies all the settings of the selected MCACC preset memory.
- **Level & Distance** – Copies only the channel level and speaker distance settings of the selected MCACC preset memory.

3 Select the MCACC preset you'll be copying the settings 'From', then specify where you want to copy them 'To'.

Make sure you don't overwrite an MCACC preset you're currently using (this can't be undone).

4 Select 'OK' to confirm and copy the settings.

When **MCACC Memory Copy?** is displayed, select **YES**. If **NO** is selected, the memory is not copied. **Completed!** shows in the GUI screen to confirm the MCACC preset has been copied, then you automatically return to the **Data Management** setup menu.

Clearing MCACC presets

If you are no longer using one of the MCACC presets stored in memory, you can choose to clear the calibration settings of that preset.

1 Select 'MCACC Memory Clear' from the Data Management setup menu.

2 Select the MCACC preset you want to clear.

Make sure you don't clear an MCACC preset you're currently using (this can't be undone).

3 Select 'OK' to confirm and clear the preset.

When **MCACC Memory Clear?** is displayed, select **YES**. If **NO** is selected, the memory is not cleared. **Completed!** shows in the GUI screen to confirm the MCACC preset has been cleared, then you automatically return to the **Data Management** setup menu.

The System Setup and Other Setup menus

Making receiver settings from the System Setup menu 113
Manual speaker setup 113
MHL Setup 115
The Other Setup menu 116
Making network settings using Safari 119
Using Safari to set a friendly name 119
Using Safari to update the firmware 119

Making receiver settings from the System Setup menu

The following section describes how to change the speaker-related settings manually and make various other settings (input selection, OSD language selection, etc.).

- With factory default settings, the on-screen display will be output from all HDMI output terminals and displayed on any TV connected via HDMI cable. You can change where the screen is output in the **MAIN/HDZONE** (page 117) and HDMI output (page 94) settings.

1 Press ⏻ STANDBY/ON to switch on the receiver and your TV.

Make sure that the TV's video input is set to this receiver.

2 Press MAIN RECEIVER to switch the remote control to the receiver operation mode, and then press HOME MENU.

A Graphical User Interface (GUI) screen appears on your TV. Use ⬆/⬇/⬅/➡ and **ENTER** to navigate through the screens and select menu items. Press **RETURN** to exit the current menu.

- Press **HOME MENU** at any time to exit the **HOME MENU**.

3 Select 'System Setup' from the HOME MENU, then press ENTER.

4 Select the setting you want to adjust.

- **Input Setup** – Specifies what you've connected to the digital, HDMI and component video inputs (see The Input Setup menu on page 61).
- **HDMI Setup** – Synchronizes this receiver with your Pioneer component supporting **Control** with HDMI (page 84).
- **Manual SP Setup** – Sets the placement of the speakers, usage pattern, as well as the size, number, distance and overall balance of the connected speakers (Manual speaker setup on page 113).
- **MHL Setup** – Changes the settings related to MHL (see MHL Setup on page 115).
- **OSD Language** – The GUI screen's display language can be changed (see Changing the OSD display language (OSD Language) on page 62).
- **Other Setup** – Makes customized settings to reflect how you are using the receiver (see The Other Setup menu on page 116).

Manual speaker setup

This receiver allows you to make detailed settings to optimize the surround sound performance. You only need to make these settings once (unless you change the placement of your current speaker system or add new speakers).

These settings are designed to customize your system, but if you're satisfied with the settings made in Automatically conducting optimum sound tuning (Full Auto MCACC) on page 59, it isn't necessary to make all of these settings.

CAUTION

- The test tones used in the **Manual SP Setup** are output at high volume.

1 Select 'Manual SP Setup', then press ENTER.

See Making receiver settings from the System Setup menu on page 113 if you're not already at this screen.

2 Select the setting you want to adjust.

If you are doing this for the first time, you may want to adjust these settings in order:

- **Speaker System** – Sets the placement/usage pattern of the speakers (page 113).
- **Speaker Setting** – Specifies the size and number of speakers you've connected (page 114).
- **Channel Level** – Adjusts the overall balance of your speaker system (page 115).
- **Speaker Distance** – Specifies the distance of your speakers from the listening position (page 115).
- **X-Curve** – Adjusts the tonal balance of your speaker system for movie soundtracks (page 115).

3 Make the adjustments necessary for each setting, pressing RETURN to confirm after each screen.

Speaker system setting

- Default setting: **7.2.2/5.2.2/7.2ch**

This receiver can be used for various applications such as surround back terminal and top middle speaker terminal. Here, application for these terminals are set. Select from the following items.

- For details on arranging speakers during each setup, refer to Determining the speakers' application on page 20.
- For details on connecting speakers during each setup, refer to Installing your speaker system on page 27.

1 Select 'Speaker System' from the Manual SP Setup menu.

See Making receiver settings from the System Setup menu on page 113 if you're not already at this screen.

2 Select the speaker system setting.

- **7.2.2/5.2.2/7.2ch** – Select for normal home theater use with top middle speakers in your main (speaker system A) setup.
- **9.2.2ch TMd/FH** – Select for normal home theater use with top middle and front height speakers in your main (speaker system A) setup.
- **7.2.4ch SB Pre out** – Select for the maximum 7.2.4 channel surround system including top forward and top backward speakers, with the surround back channel connected to an external amplifier.
- **7.2.4ch Front Pre out** – Select for the maximum 7.2.4 channel surround system including top forward and top backward speakers, with the front channel connected to an external amplifier.
- **7.2.2ch Front Bi-Amp** – Select this setting if you're bi-amping your front speakers (see Bi-amping your speakers on page 26).
- **7.2.2/7.2ch + SP-B** – Select to use the B speaker terminals (**EXTRA 1**) to listen to stereo playback in another room (see Switching the speaker terminals on page 93).
- **7.2ch + HDZONE** – Select to use the **EXTRA 1** speaker terminal to connect to the HDZONE separately from the sound of the main 7.2 channel system (Using the MULTI-ZONE controls on page 95).
- **5.2 Bi-Amp+HDZONE** – Select this to use the surround back speaker terminals for an independent system in another zone with the front speakers bi-amped (Bi-amping your speakers on page 26 and Using the MULTI-ZONE controls on page 95).
- **5.2ch + SP-B Bi-Amp** – Select this setting if you're bi-amping your B speakers (Bi-amping your speakers on page 26).
- **5.2ch F+Surr Bi-Amp** – Select this setting if you're bi-amping your front and surround speakers (Bi-amping your speakers on page 26).
- **5.2ch F+C Bi-Amp** – Select this setting if you're bi-amping your front and center speakers (Bi-amping your speakers on page 26).
- **5.2ch C+Surr Bi-Amp** – Select this setting if you're bi-amping your center and surround speakers (Bi-amping your speakers on page 26).
- **Multi-ZONE Music** – See Using Multi-ZONE Music on page 114.
- **5.2 +ZONE 2+HDZONE** – Select to use the surround back (ZONE 2) and **EXTRA 1** (HDZONE) speaker terminals for an independent systems in another zone (see Using the MULTI-ZONE controls on page 95).
- **5.2 +ZONE 2+ZONE 3** – Select to use the surround back (ZONE 2) and **EXTRA 1** (ZONE 3) speaker terminals for an independent systems in another zone (see Using the MULTI-ZONE controls on page 95).

3 When 'Setting Change?' is displayed, select Yes.

If **No** is selected, the setting is not changed.

You will return to the **Manual SP Setup** menu.

Using Multi-ZONE Music

Multi-ZONE Music can be used to play the same sound in the MAIN ZONE, ZONE 2 and ZONE 3, for example for home parties. Normally set **Speaker System** to **5.2 +ZONE 2+ZONE 3** for multi-zone/multi-source playback, then switch it to **Multi-ZONE Music** when having a home party. When this is done, the sound of the input function selected for the MAIN ZONE is played in all zones (the MAIN ZONE, ZONE 2 and ZONE 3).

- There is virtually no delay in the sound.
- Switching of the input for only ZONE 2 or ZONE 3 is disabled, but the volume can be adjusted or muted for the individual zones.
- This is only valid for ZONE 2 and ZONE 3 connections using the speaker terminals. No sound is output from the ZONE 2 and ZONE 3 pre-out terminals.
- The **HDZONE** setting does not apply to **Multi-ZONE Music**.

Speaker Setting

Use this setting to specify your speaker configuration (size, number of speakers and crossover frequency). It is a good idea to make sure that the settings made in Automatically conducting optimum sound tuning (Full Auto MCACC) on page 59 are correct. Note that this setting applies to all MCACC presets, and cannot be set independently.

1 Select 'Speaker Setting' from the Manual SP Setup menu.

2 Choose the set of speakers that you want to set, then select a speaker size.

Use ⬅/➡ to select the size (and number) of each of the following speakers:

- **SW 1**/**SW 2** – LFE signals and bass frequencies of channels set to **SMALL** are output from the subwoofer when **YES** is selected. Choose the **PLUS** setting if you want the subwoofer to output bass sound continuously or you want deeper bass (the bass frequencies that would normally come out the front and center speakers are also routed to the subwoofer). If you did not connect a subwoofer choose **NO** (the bass frequencies are output from other speakers).
  — If you have a subwoofer and like lots of bass, it may seem logical to select **LARGE** for your front speakers and **PLUS** for the subwoofer. This may not, however, yield the best bass results. Depending on the speaker placement of your room you may actually experience a decrease in the amount of bass due low frequency cancellations. In this case, try changing the position or direction of speakers. If you can't get good results, listen to the bass response with it set to **PLUS** and **YES** or the front speakers set to **LARGE** and **SMALL** alternatively and let your ears judge which sounds best. If you're having problems, the easiest option is to route all the bass sounds to the subwoofer by selecting **SMALL** for the front speakers.
- **Front** – Select **LARGE** if your front speakers reproduce bass frequencies effectively, or if you didn't connect a subwoofer. Select **SMALL** to send the bass frequencies to the subwoofer.
- **Center** – Select **LARGE** if your center speaker reproduces bass frequencies effectively, or select **SMALL** to send bass frequencies to the other speakers or subwoofer. If you didn't connect a center speaker, choose **NO** (the center channel is sent to the front speakers).
- **TMd** – Select **LARGE** if your top middle speakers reproduce bass frequencies effectively, or select **SMALL** to send bass frequencies to the other speakers or subwoofer. When setting up the Dolby Enabled Speaker on the front speaker, please select **Dolby Sp (Front)**. When setting up the Dolby Enabled Speaker on the surround speaker, please select **Dolby Sp (Surr)**. When setting up the Dolby Enabled Speaker on the surround back speaker, please select **Dolby Sp (SB)**. If you didn't connect the top middle speakers, choose **NO** (the top middle channel is sent to the front speakers).
  — You can adjust this setting only when **Speaker System** setting is **7.2.2/5.2.2/7.2ch**, **9.2.2ch TMd/FH**, **7.2.2ch Front Bi-Amp**, or **7.2.2/7.2ch + SP-B**.
- **TFw** – Select **LARGE** if your top forward speakers reproduce bass frequencies effectively, or select **SMALL** to send bass frequencies to the other speakers or subwoofer. When setting up the Dolby Enabled Speaker on the front speaker, please select **Dolby Sp (Front)**. If you didn't connect the top forward speakers, choose **NO** (the top forward channel is sent to the front speakers).
  — You can adjust this setting only when **Speaker System** setting is **7.2.4ch SB Pre out** or **7.2.4ch Front Pre out**.
  — When you set **TBw** to **NO**, this setting is automatically set to **NO**.
- **TBw** – Select **LARGE** if your top backward speakers reproduce bass frequencies effectively, or select **SMALL** to send bass frequencies to the other speakers or subwoofer. When setting up the Dolby Enabled Speaker on the surround speaker, please select **Dolby Sp (Surr)**. When setting up the Dolby Enabled Speaker on the surround back speaker, please select **Dolby Sp (SB)**. If you didn't connect the top backward speakers, choose **NO** (the top backward channel is sent to the front speakers).
  — You can adjust this setting only when **Speaker System** setting is **7.2.4ch SB Pre out** or **7.2.4ch Front Pre out**.
  — When you set **TFw** to **NO**, this setting is automatically set to **NO**.
- **FH** – Select **LARGE** if your front height speakers reproduce bass frequencies effectively, or select **SMALL** to send bass frequencies to the other speakers or subwoofer. If you didn't connect front height speakers, choose **NO** (the front height channel is sent to the front speakers).
  — You can adjust this setting only when **Speaker System** setting is **9.2.2ch TMd/FH**.
  — If the surround speakers are set to **NO**, this setting will automatically be set to **NO**.
- **FW** – Select **LARGE** if your front wide speakers reproduce bass frequencies effectively, or select **SMALL** to send bass frequencies to the other speakers or subwoofer. If you didn't connect front wide speakers, choose **NO** (the front wide channel is sent to the front speakers).
  — You can adjust this setting only when **Speaker System** setting is **9.2.2ch TMd/FH**.
  — If the surround speakers are set to **NO**, this setting will automatically be set to **NO**.
- **Surr** – Select **LARGE** if your surround speakers reproduce bass frequencies effectively. Select **SMALL** to send bass frequencies to the other speakers or subwoofer. If you didn't connect surround speakers choose **NO** (the sound of the surround channels is sent to the front speakers or a subwoofer).
- **SB** – Select the number of surround back speakers you have (one, two or none). Select **LARGEx2** or **LARGEx1** if your surround back speakers reproduce bass frequencies effectively. Select **SMALLx2** or **SMALLx1** to send bass frequencies to the other speakers or subwoofer. If you didn't connect surround back speakers choose **NO**.
  — You can adjust this setting only when **Speaker System** setting is **7.2.2/5.2.2/7.2ch**, **9.2.2ch TMd/FH**, **7.2.4ch SB Pre out**, **7.2.4ch Front Pre out**, **7.2.2/7.2ch + SP-B**, **7.2.2ch Front Bi-Amp** or **7.2ch + HDZONE**.
  — If the surround speakers are set to **NO**, the surround back speakers will automatically be set to **NO**.

If you select **NO** for the subwoofer the front speakers will automatically be fixed to **LARGE**. Also, the center, top forward, top middle, top backward, surround, surround back, front height and front wide speakers can't be set to **LARGE** if the front speakers are set to **SMALL**. In this case, all bass frequencies are sent to the subwoofer.
If you change the setting from **Dolby Sp (Front/Surr/SB)** to **SMALL** or **LARGE**, the set value for **Speaker Distance** may be changed. This is because the maximum value of **Speaker Distance** when set to **Dolby Sp (Front/Surr/SB)** is bigger than the maximum value of **Speaker Distance** when set to **SMALL** or **LARGE**. If the value of **Speaker Distance** set to **Dolby Sp (Front/Surr/SB)** exceeds the maximum value of **Speaker Distance** for **SMALL** or **LARGE**, **Speaker Distance** for **SMALL** or **LARGE** is set to its maximum value.

3 Select 'X. OVER' and set the crossover frequency.

Frequencies below this point will be sent to the subwoofer (or **LARGE** speakers).

- This setting decides the cutoff between bass sounds playing back from the speakers selected as **LARGE**, or the subwoofer, and bass sounds playing back from those selected as **SMALL**. It also decides where the cutoff will be for bass sounds in the LFE channel.
- With **Full Auto MCACC** setup or **Auto MCACC** setup (**ALL** or **Speaker Setting**), the setting here will not apply and the crossover frequency will be automatically set. Crossover frequency is a frequency aimed at achieving the optimal sound field taking into account the bass capacity of all connected speakers and human aural characteristics.

4 When you're finished, press RETURN.

You will return to the **Manual SP Setup** menu.

Channel Level

Using the channel level settings, you can adjust the overall balance of your speaker system, an important factor when setting up a home theater system.

1 Select 'Channel Level' from the Manual SP Setup menu.

The test tones will start.

2 Adjust the level of each channel using ⬅/➡.

Use ⬆/⬇ to switch speakers.
Adjust the level of each speaker as the test tone is emitted.

- If you are using a Sound Pressure Level (SPL) meter, take the readings from your main listening position and adjust the level of each speaker to 75 dB SPL (C-weighting/slow reading).

3 When you're finished, press RETURN.

You will return to the **Manual SP Setup** menu.

Speaker Distance

For good sound depth and separation from your system, you need to specify the distance of your speakers from the listening position. (When Dolby Enabled Speaker is used, specify the distance reached by the speaker sound reflected at the ceiling (page 21).) The receiver can then add the proper delay needed for effective surround sound.

1 Select 'Speaker Distance' from the Manual SP Setup menu.

2 Adjust the distance of each speaker using ⬅/➡.

You can adjust the distance of each speaker in 1/2 inch Increments.

3 When you're finished, press RETURN.

You will return to the **Manual SP Setup** menu.

Note

For best surround sound, make sure the surround back speakers are the same distance from the listening position.

X-Curve

Most soundtracks mixed for cinema sound too bright when played back in large rooms. The X-Curve setting acts as a kind of re-equalization for home theater listening, and restores proper tonal balance of movie soundtracks.

1 Select 'X-Curve' from the Manual SP Setup menu.

2 Choose the X-Curve setting you want.

Use ⬅/➡ to adjust the setting. The X-Curve is expressed as a downwards slope in decibels per octave, starting at 2 kHz. The sound becomes less bright as the slope increases (to a maximum of **–3.0dB/oct**). Use the following guidelines to set the X-Curve according to your room size:

Room size (ft^2)	≤400	≤550	≤650	≤800	≤3200	≤12000
X Curve (dB/oct)	0.5	1.0	1.5	2.0	2.5	3.0

- If you select **OFF**, the frequency curve will be flat and the X-Curve has no effect.

3 When you're finished, press RETURN.

MHL Setup

Select whether or not to switch the input automatically to the **MHL** input when an MHL-compatible device is connected.

- Default setting: **ON**

1 Press MAIN RECEIVER to switch the remote control to the receiver operation mode, and then press HOME MENU.

A Graphical User Interface (GUI) screen appears on your TV. Use ⬆/⬇/⬅/➡ and **ENTER** to navigate through the screens and select menu items. Press **RETURN** to exit the current menu.

- Press **HOME MENU** at any time to exit the **HOME MENU**.

2 Select 'System Setup' from the HOME MENU, then press ENTER.

3 Select 'MHL Setup' from the System Setup menu.

4 Select the 'Auto input switching' from the MHL Setup menu.

5 Use ⬅/➡ to select the setting.

- **OFF** – Does not automaticly switch to **MHL** input.
- **ON** – Automatically switches to **MHL** input.

6 Select 'OK', then press ENTER.

Notes

- This is only valid for MHL-compatible devices supporting this function.
- When the power is on, the MHL-compatible device is charged. (This receiver supports charging of devices up to 0 9 A.)

The Other Setup menu

The **Other Setup** menu is where you can make customized settings to reflect how you are using the receiver.

1 Press MAIN RECEIVER to switch the remote control to the receiver operation mode, and then press HOME MENU.

A Graphical User Interface (GUI) screen appears on your TV. Use ⬆/⬇/⬅/➡ and **ENTER** to navigate through the screens and select menu items. Press **RETURN** to exit the current menu.

2 Select 'System Setup' from the HOME MENU.

3 Select 'Other Setup', then press ENTER.

4 Select the setting you want to adjust.

If you are doing this for the first time, you may want to adjust these settings in order:

- **Auto Power Down** – Sets the power to turn off automatically when the receiver is not being used (page 116).
- **Volume Setup** – Sets up the volume-related operations of this receiver (page 116).
- **Software Update** – Use to update the receiver's software and check the version (page 116).
- **On Screen Display Setup** – Sets whether or not to display the status on the display when the receiver is operated (page 117).
- **Remote Control Mode Setup** – Sets this receiver's remote control mode (page 117).
- **ZONE Setup** – Use to make the sub zone-related settings (page 117).
- *SC-99 only:*
  Multi Ch In Setup – Specifies the optional settings for a multi-channel input (page 118).
- **Maintenance Mode** – This is used to receive maintenance from a Pioneer service engineer or custom installer (page 118).

5 Make the adjustments necessary for each setting, pressing RETURN to confirm after each screen.

Auto Power Down

The power can be set to turn off automatically if no operation has been performed for a specific amount of time with no audio or video signals being input to the receiver.

When using ZONE 2 and HDZONE, you can also configure the power of ZONE 2 and HDZONE to turn off. In the case of ZONE 2 and HDZONE, you can automatically have the power turn off once a set amount of time has elapsed even if there is signal input and user operations. In the main zone, ZONE 2 and HDZONE, you can configure the time of each separately.

1 Select 'Auto Power Down' from the Other Setup menu.

2 Select the zone you want to set and set the time after which the power turns off.

- **MAIN** – The time can be selected from among "**15 min**", "**30 min**", "**60 min**" and "**OFF**". The power turns off after there has been no signal and no operation for the selected time.
- **ZONE 2** – The time can be selected from among "**30 min**", "**1 hour**", "**3 hours**", "**6 hours**", "**9 hours**" and "**OFF**". The power turns off after the selected time.
- **HDZONE** – The time can be selected from among "**30 min**", "**1 hour**", "**3 hours**", "**6 hours**", "**9 hours**" and "**OFF**". The power turns off after the selected time.

Notes

- Depending on the connected devices, the Auto Power Down function may not work properly due to excessive noise or other reasons.
- When using WAC mode (page 55), this feature does not work.

Volume Setup

You can set the maximum volume of this receiver or specify what the volume level will be when the power is turned on.

1 Select 'Volume Setup' from the Other Setup menu.

2 Select the Power ON Level setting you want.

The volume can be set so that it is always set to the same level when the receiver's power is turned on.

- **LAST** (default) – When the power is turned on, the volume is set to the same level as when the power was last turned off.
- "**---**" – When the power is turned on, the volume is set to minimum level.
- **–80.0dB** to **+12.0dB** – Specify the volume to be set when the power is turned on, in steps of 0.5 dB.

It is not possible to set a volume level greater than the value specified at Volume Limit setup (see below).

3 Select the Volume Limit setting you want.

Use this function to limit the maximum volume. The volume cannot be increased above the level set here, even by operating **VOLUME** button (or the dial on the front panel).

- **OFF** (default) – The maximum volume is not limited.
- **–20.0dB**/**–15.0dB**/**–10.0dB**/**–5.0dB**/**0.0dB** – The maximum volume is limited to the value set here.

4 Select the Mute Level setting you want.

This sets how much the volume is to be turned down when **MUTE** is pressed.

- **FULL** (default) – No sound.
- **–40.0dB**/**–20.0dB** – The volume will be turned down to the level specified here.

5 When you're finished, press RETURN.

You will return to the **Other Setup** menu.

Software Update

Use this procedure to update the receiver's software and check the version. There are two ways to update: via the Internet and via a USB memory device.

Updating via the Internet is performed by accessing the file server from the receiver and downloading the file. This procedure is only possible if the receiver is connected to the Internet.

Updating via a USB memory device is performed by downloading the update file from a computer, reading this file onto a USB memory device then inserting this USB memory device into the USB port on the receiver's front panel. With this procedure, the USB memory device containing the update file must first be inserted into the USB port on the receiver's front panel.

- If an update file is provided on the Pioneer website, download it onto your computer. When downloading an update file from the Pioneer website onto your computer, the file will be in ZIP format. Unzip the ZIP file before saving it on the USB memory device. If there are any old downloaded files or downloaded files for other models on the USB memory device, delete them.
  http://www.pioneerelectronics.com
- If an update file does not exist in the Pioneer's website, updating the software for the receiver is not necessary.

Important

- DO NOT unplug the power cord during updating.
- When updating via the Internet, do not disconnect the LAN cable. When updating via a USB memory device, do not disconnect the USB memory device.
- If updating is interrupted before it is completed, start updating over from the beginning.
- The receiver's settings may be reset when the software is updated. Information on the models for which the settings are reset is provided on the Pioneer website. Check the website before updating.

1 Select 'Software Update' from the Other Setup menu.

2 Select the update procedure.

- **Update via Internet** – The receiver checks whether updatable software is available via the Internet.
- **Update via USB Memory** – The receiver checks whether the USB memory device inserted into the USB port on the receiver's front panel contains updatable software.
  "**Accessing**" is displayed and the update file is checked. Wait a while.

3 Check on the screen whether or not an update file was found.

If "**New version found.**" is displayed, the update file has been found. The version number and updating time are displayed.
If "**This is the latest version. There is no need to update.**" is displayed, no update file has been found.

4 To update, select OK.

The updating screen appears and updating is performed.

- The power turns off automatically once updating is completed.

Software Update messages

Status messages	Descriptions
FILE ERROR	Try disconnecting then reconnecting the USB device or storing the update file again. If the error still occurs, try using a different USB memory device.
	No update file was found on the USB memory device. Store the file in the USB memory device's root directory.
UPDATE ERROR 1 to UPDATE ERROR 7	Turn the receiver's power off, then turn it back on and try updating the software again.
Update via USB	If this message flashes, updating has failed. Update via a USB memory device. Put the update file on a USB memory device and connect the device to the USB port. When the file is found, software updating starts automatically.
UE11	Updating has failed. Use the same procedure to update the software again.
UE22	
UE33	The software update failed. This receiver's setup screen may no longer appear on the TV screen. Using the USB memory, perform the software update while looking at the receiver's front panel display. (Refer to the following.)

Using USB memory, update the software while looking at the front panel display on this receiver

1 Press MAIN RECEIVER to switch the remote control to the receiver operation mode, and then press HOME MENU.

2 Use ⬆/⬇, to select 'System Setup' and press ENTER.

3 Use ⬆/⬇, to select 'Other Setup' and press ENTER.

4 Use ⬆/⬇, to select 'Update' and press ENTER.

5 Use ⬆/⬇, to select 'via USB' and press ENTER.

6 Once "OK" appears, then press ENTER.

7 Once "UPDATE? ◀NO" appears, use ⬅ to select 'YES' and press ENTER.

Software update will start.

On Screen Display Setup

When the receiver is operated, its status (the input name, listening mode, etc.) is displayed superimposed over the video output on the display. This status display can be turned off by switching this setting to **OFF**. The setting can be made for the main zone and HDZONE, respectively.

- Default: **ON** (both the main zone and HDZONE)

1 Select 'On Screen Display Setup' from the Other Setup menu.

2 Select and set the main zone or HDZONE for which you wish to change the setting.

3 Select the On Screen Display setting you want.

4 When you're finished, press RETURN.

You will return to the **Other Setup** menu.

Notes

- The on-screen display is only displayed for video output from the HDMI terminal.
- When the video input signal is 3D signal or partially 4K, the OSD screen is not displayed.
- The size of the characters displayed differs according to the output resolution.

Remote Control Mode Setup

- Default setting: **1**

This sets this receiver's remote control mode to prevent erroneous operation when multiple units of the receiver are being used.

1 Select 'Remote Control Mode Setup' from the Other Setup menu.

2 Select the Remote Control Mode setting you want.

3 Select 'OK' to change the remote control mode.

4 Follow the instructions on the screen to change the remote control's setting.

See Operating multiple receivers on page 99.

5 When you're finished, press RETURN.

You will return to the **Other Setup** menu.

ZONE Setup

Switches the sub-zone setting.

MAIN/HDZONE setting (setting for how to use the HDMI OUT 3 terminal)

1 Select 'ZONE Setup' from the Other Setup menu.

2 Select 'MAIN/HDZONE', then press ENTER.

3 Set how the HDMI OUT 3 terminal is to be used.

- **MAIN**: Select this to output the same input source as in the main zone.
  After setting this to **MAIN**, exit the home menu, then press **OUT P.** and select the terminal for HDMI output (page 94).
- **HDZONE** (default): Use the HDMI output's multizone function (**HDZONE**) to output an input source different from the one in the main zone (page 95).

4 Select 'OK', then press ENTER.

ZONE 2/ZONE 3/HDZONE setting

The volume setting and tone for the sub zones that can be used with this receiver can be changed and adjusted here.

- When making multi-zone connections using the **AUDIO ZONE 2 OUT** or **AUDIO ZONE 3 OUT** terminals and performing playback in Zone 2 or Zone3, you can set whether to adjust the Zone 2 or Zone3 volume on the receiver or to fix it to a specific volume (**–40 dB Fixed** or **0 dB Fixed**). This is set to **Variable** upon shipment from the factory, allowing the volume to be adjusted on the receiver. If you would like to adjust the volume from the connected amplifier, make the setting below.
- HDZONE can be set when **Speaker System** is **7.2ch + HDZONE**, **5.2 Bi-Amp+HDZONE** or **5.2 +ZONE 2+HDZONE**.
- HDZONE is set to **Variable**. It cannot be set to **–40 dB Fixed** and **0 dB Fixed**.

CAUTION

- Note that when **Volume Level** is set to **0 dB Fixed**, the audio output from the **AUDIO ZONE 2 OUT** terminals is set to the maximum. Also, depending on the volume setting on the connected amplifier, large volumes may be produced even when **Volume Level** is set to **–40 dB Fixed**.

1 Select 'ZONE Setup' from the Other Setup menu.

2 Select a sub zone for which you wish to change the setting.

3 Select the Volume Level setting you want.

- **Variable** (default) – Adjusts the sound volume of the sub zone using this unit.
- **–40 dB Fixed**/**0 dB Fixed** – The Zone 2/Zone 3 volume level output from the receiver is fixed to the value set here.

4 Select the Power ON Level setting you want.

Sets the sound volume of the sub zone when the multi-zone function is used to turn on the sub zone. Volume can be set for ZONE 2, ZONE 3, and HDZONE, respectively.
When **Volume Level** is set to **–40 dB Fixed** or **0 dB Fixed**, the volume is fixed to that level, so the volume cannot be set here.

- **LAST** (default) – When MULTI-ZONE is turned on, the volume is set to the level set the last time you were listening to that zone.
- "**---**" – When MULTI-ZONE is turned on, the volume for that zone is set to the minimum.
- **–80.0dB** to **0dB** – When MULTI-ZONE is turned on, the volume is set to the level set here. The volume can be set up to the value set at **Volume Limit** below.

5 Select the Volume Limit setting you want.

The maximum volume for the zone selected in step 2 can be set.

- **OFF** (default) – The maximum volume is not limited.
- **–20.0dB**/**–10.0dB** – The maximum volume is limited to the value set here.

6 Select the Mute Level setting you want.

The mute level for the zone selected in step 2 can be set.
This sets how much the volume is to be turned down when **MUTE** is pressed.

- **FULL** (default) – No sound.
- **–40.0dB**/**–20.0dB** – The volume will be turned down to the level specified here.

7 Adjust Lch Level and Rch Level.

The channel level for the zone selected in step 2 can be set.
The level can be adjusted between **–12.0dB** and **+12.0dB**, in 1 dB steps.

8 When you're finished, press RETURN.

You will return to the **Other Setup** menu.

Multi Channel Input Setup

SC-99 only

You can adjust the level of the subwoofer for a multi-channel input. Also, when the multi-channel input is selected as an input function, you can display the video images of other input functions. In the Multi Channel Input Setup, you can assign a video input to the multi-channel input.

1 Select 'Multi Ch In Setup' from the Other Setup menu.

2 Select the 'SW Input Gain' setting you want.

- **0dB** – Outputs sound of the subwoofer at the level originally recorded on the source.
- **+10dB** – Outputs sound of the subwoofer at the level increased by 10 dB.

3 Select the 'Video Input' setting you want.

When the multi-channel input is selected as an input function, you can display the video images of other input functions. The video input can be selected from the following: **SAT/CBL**, **DVR/BDR**, **OFF**.

4 When you're finished, press RETURN.

You will return to the **Other Setup** menu.

Maintenance Mode

Only use this if so instructed by a Pioneer service engineer or custom installer.

Making network settings using Safari

1 Launch Safari on your computer.

2 Press Bookmark icon. Click Bonjour list (a), and then select this receiver's name (Friendly Name) (b) in Bookmark.

If **Bonjour** list is not displayed, access the IP address"http://(the receiver's IP address)" from Safari.

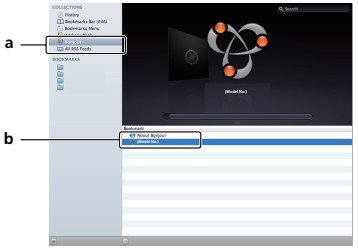

3 On the AVNavigator menu screen, select Network Setup.

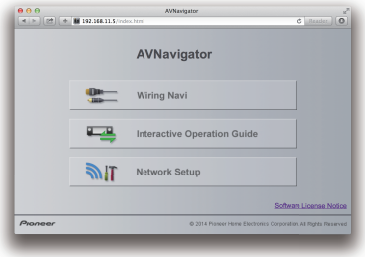

4 Click Network Configuration.

5 Setup the network settings manually and then press Apply.

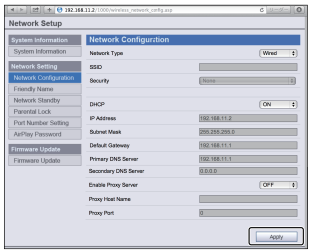

Note

This setting for the network has been confirmed for OS X v 10.7 and Safari 5.1.

Using Safari to set a friendly name

1 Launch Safari on your computer.

2 Press Bookmark icon. Click Bonjour list (a), and then select this receiver's name (Friendly Name) (b) in Bookmark.

If **Bonjour** list is not displayed, access the IP address"http://(the receiver's IP address)" from Safari.

3 On the AVNavigator menu screen, select Network Setup.

4 Click Friendly Name.

5 Input a friendly name, then press Apply.

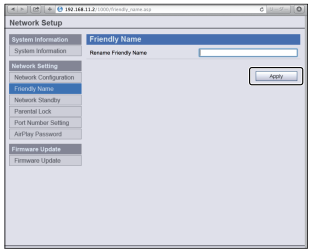

Note

This setting for the network has been confirmed for OS X v 10.7 and Safari 5.1.

Using Safari to update the firmware

1 Launch Safari on your computer.

2 Press Bookmark icon. Click Bonjour list (a), and then select this receiver's name (Friendly Name) (b) in Bookmark.

If **Bonjour** list is not displayed, access the IP address"http://(the receiver's IP address)" from Safari.

3 On the AVNavigator menu screen, select Network Setup.

4 Click Firmware Update.

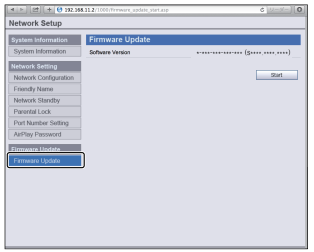

5 Press Start.

The firmware update prepare screen is displayed. If the screen does not switch automatically, click **Click here**.

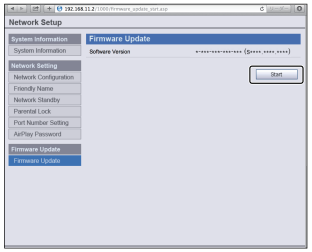

6 Browse the latest firmware on your computer (a) and then press Upload (b).

Firmware files have the extension “fw”. Select a file with the extension “fw”.
The confirmation screen is displayed. If you continue the firmware update, press **OK**. Once the firmware update process starts, you cannot stop it. Wait until the file is uploaded (about one minute may be required depending on your LAN connection environment).

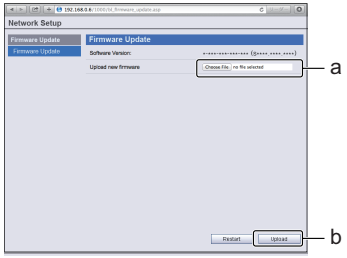

7 The firmware upload status screen is displayed.

“**The upload process finished successfully.**” will be shown when the update is completed.
Once updating is completed, the receiver’s power automatically turns off.

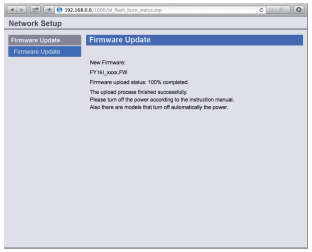

Note

This setting for the network has been confirmed for OS X v 10.7 and Safari 5.1.

FAQ

Troubleshooting 122
Power 122
No sound 122
Other audio problems 123
BT AUDIO 124
Video 124
Settings 125
Professional Calibration EQ graphical output 125
Display 125
Remote control 126
HDMI 126
MHL 127
Built-in AVNavigator 127
USB interface 127
iPod 128
Network 128
USB-DAC 130
Wireless LAN 130

Troubleshooting

Incorrect operations are often mistaken for trouble and malfunctions. If you think that there is something wrong with this component, check the points below. Sometimes the trouble may lie in another component. Investigate the other components and electrical appliances being used. If the trouble cannot be rectified even after exercising the checks listed below, ask your nearest Pioneer authorized independent service company to carry out repair work.

- If the unit does not operate normally due to external effects such as static electricity disconnect the power plug from the outlet and insert again to return to normal operating conditions.

If the problem is not solved after the troubleshooting below, if the screen freezes unexpectedly or if the buttons on the remote control or front panel stop working completely, do the following:

- Press ⏻ **STANDBY/ON** on the front panel to turn off the power, then turn the power back on.
  If this does not solve the problem, turn off the power again, then press and hold the ⏻ **STANDBY/ON** button on the front panel for at least five seconds. (The power turns on, then turns off after five seconds.)
- If the power cannot be turned off, press and hold ⏻ **STANDBY/ON** on the front panel for over five seconds. The power will turn off. In this case, the various settings made on the receiver may be cleared.

Power

Symptom	Remedy
The power does not turn on.	Make sure that the power cord is plugged in to an active power outlet.
	Try disconnecting from the power outlet, then plugging back in.
Power automatically turns off.	When **Auto Power Down** is set, the power automatically turns off at the set time (page 116).
When the power is turned on, the **WIRELESS** indicator slowly flashes.	After unpacking, turning on the power, and returning to initial factory settings (page 97), the **WIRELESS** indicator slowly flashes. This is not a malfunction.
	This receiver is designed to automatically enter WAC mode when turning on the power of this receiver in the initial factory settings state. For details about WAC mode, please refer to page 55. After the network settings (page 53) have been completed, the **WIRELESS** indicator flashing disappears.
	When using the receiver without connecting to the network, set the **Network Type** setting to **Wired** (page 54).
Power cannot be turned off. (**ZONE 2 ON** is displayed.)	Press the **Z2** button on the remote control for 1.5 seconds and then press the ⏻ **STANDBY/ON** button to turn OFF the power.
Power cannot be turned off. (**ZONE 3 ON** is displayed.)	Press the **Z3** button on the remote control for 1.5 seconds and then press the ⏻ **STANDBY/ON** button to turn OFF the power.
Power cannot be turned off. (**HDZONE ON** is displayed.)	Press the **HDZ** button on the remote control for 1.5 seconds and then press the ⏻ **STANDBY/ON** button to turn OFF the power.
The receiver suddenly switches off or the **WIRELESS** indicator blinks.	Check that there are no loose strands of speaker wire touching the rear panel or another set of wires. If so, re-attach the speaker wires, making sure there are no stray strands.
	The receiver may have a serious problem. Disconnect from the power and call a Pioneer authorized independent service company.
During loud playback the power suddenly switches off.	Turn down the volume.
	Lower the 63 Hz and 125 Hz equalizer levels in the Manual MCACC setup on page 107.
	Switch on the digital safety feature. While holding down **ENTER** on the front panel, press ⏻ **STANDBY/ON** to set this receiver to the standby mode. Use **TUNE** ⬆/⬇ to select **D.SAFETY** ◄**OFF**►, and then use **PRESET** ⬅/➡ to select **1** or **2** (select **D.SAFETY** ◄**OFF**► to deactivate this feature). If the power switches off even with **2** switched on, turn down the volume. With **1** or **2** on, some features may be unavailable.
	If there is very little low frequency information in the source material, change your speaker settings to Front: **SMALL** / Subwoofer: **YES**, or Front: **LARGE** / Subwoofer: **PLUS** (see Speaker Setting on page 114).
The unit does not respond when the buttons are pressed.	Try switching the receiver off, then back on again.
	Try disconnecting the power cord, then connect again.
AMP ERR is indicated and the main power turns off. The **MCACC PRO** indicator blinks and the main power does not turn on.	The receiver may have a serious problem. Do not try switching the receiver on. Unplug the receiver from the wall and call a Pioneer authorized independent service company.
The receiver suddenly switches off or the **FL OFF** indicator blinks.	There is a possibility that the power supply circuit of the receiver has failed. Wait at least one minute and then turn ON the power again. If the same symptom appears again after turning ON the power again, stop using the receiver, disconnect the power cable and request repair.
AMP OVERHEAT blinks in the display and the **FL OFF** indicator flash and the power turns off.	Allow the unit to cool down in a well-ventilated place before switching back on (see Installing the receiver on page 11).
	Check whether the cables used to connect the speakers are short-circuited.
	Wait at least 1 minute, then try turning the power on again.
	The temperature within the unit has exceeded the allowablevalue.
	Lower the volume level.
The main power suddenly turns off, and **MCACC PRO** indicator blinks.	The power unit is damaged. Unplug the receiver from the wall and call a Pioneer authorized independent service company.
FAN STOP is displayed, then **WIRELESS** indicator blinks.	The built-in cooling fan is malfunctioning. Do not try switching the receiver on. Unplug the receiver from the wall and call a Pioneer authorized independent service company.
Display blinks **12V TRG ERR**.	An error has arisen in the 12 V trigger jacks. Reconnect accurately then turn the power back on.

No sound

Symptom	Remedy
There is no sound output, the sound gets cut off, or there is noise present.	If **Fixed PCM** in audio parameter is set to **ON**, you will not be able to playback audio in formats other than PCM audio. For other audio formats than PCM audio, select **OFF** (See Setting the Audio options on page 89).
No sound is output when an input function is selected.	Turn the volume up to approx. –30 dB.
	Check that the speaker selector setting is set to **OFF** (page 93).
	Make sure the correct input function is selected.
	Make sure the correct input signal is selected (see Choosing the input signal on page 75).
	Check that the source equipment is correctly connected (see Connecting your equipment on page 19).
	Check that the speakers are connected properly (see Connecting the speakers on page 26).

Symptom	Remedy
No sound from the surround or center speakers.	Check that the Stereo listening mode or the Front Stage Surround Advance mode isn't selected; select one of the surround listening modes (see Enjoying various types of playback using the listening modes on page 73).
	Check that the surround/center speakers are not set to **NO** (see Speaker Setting on page 114).
	Check the speaker connections (see Connecting the speakers on page 26).
No sound from surround back speakers.	Check that the surround back speakers are set to **LARGE** or **SMALL**, and the surround speakers are not set to **NO** (see Speaker Setting on page 114).
	Check the speaker connections (see Connecting the speakers on page 26). If only one surround back speaker is connected, make sure it's connected to the left channel speaker terminal.
	When **Dolby Surround** is selected, audio is not output from the surround back speaker when it is the only one connected (set).
No sound from front height or front wide speakers.	Check that the front wide speakers are set to **LARGE** or **SMALL**, and the surround speakers are not set to **NO** (see Speaker Setting on page 114).
	Check the speaker connections (see Connecting the speakers on page 26).
	When **Speaker System** is set to **9.2.2ch TMd/FH** and **SP: TMd ON** is selected with the **OUT P.** button, no sound will be output from the front height speakers. Select **SP: FH ON** or **SP: TMd/FH ON** (see Switching the speaker terminals on page 93).
	When **Dolby Surround** is selected, audio is not output from the front wide speakers.
No sound from subwoofer.	Check that the subwoofer is connected properly, switched on and the volume turned up.
	If your subwoofer has a sleep function, make sure it is switched off.
	Make sure that the Subwoofer setting is **YES** or **PLUS** (see Speaker Setting on page 114).
	The crossover frequency may be set too low; try setting it higher to match the characteristics of your other speakers (see Speaker Setting on page 114).
	If there is very little low frequency information in the source material, change your speaker settings to Front: **SMALL** / Subwoofer: **YES**, or Front: **LARGE** / Subwoofer: **PLUS** (see Speaker Setting on page 114).
	Check that the **LFE** channel is not set to **OFF**, or to a very quiet setting (see Setting the Audio options on page 89).
	Check the speaker level settings (see Channel Level on page 115).
No sound from one speaker.	Check the speaker connection (see Connecting the speakers on page 26).
	Check the speaker level settings (see Channel Level on page 115).
	Check that the speaker hasn't been set to **NO** (see Speaker Setting on page 114).
	The channel may not be recorded in the source. By using one of the advanced effect listening modes, you may be able to create the missing channel (see Enjoying various types of playback using the listening modes on page 73).
No digital sound is output.	Make sure that the digital input is assigned correctly for the input jack the component is connected to (see The Input Setup menu on page 61).
	Check the digital output settings on the source component.
SC-99 only: No sound is produced even if **MULTI CH IN** is selected.	When **5.2ch F+Surr Bi-Amp**, **5.2ch F+C Bi-Amp** or **5.2ch C+Surr Bi-Amp** is selected in the **Speaker System** settings, no sound is produced even when **MULTI CH IN** is selected.

Other audio problems

Symptom	Remedy
Speaker switching sound (clicking sound) is heard from receiver during playback.	Since **ECO MODE 1** and **ECO MODE 2** reduce the power consumption, the speakers are switched in function of the number of input channels. Because of this, a speaker switching sound (clicking sound) may be produced when the number of input channels is switched. If this bothers you, switch to a different listening mode.
	Depending on the listening mode, the top middle and front height speakers may switch automatically in function of changes in the input audio. A speaker switching sound (clicking sound) will be heard from the receiver at this time. If this sound bothers you, we recommend to change the speaker terminal option (see Switching the speaker terminals on page 93).
Broadcast stations cannot be selected automatically, or there is considerable noise in radio broadcasts.	Fully extend the FM wire antenna, adjust the position for best reception and secure to a wall, etc.
	Use an outdoor antenna for better reception (see page 44).
	Adjust the position and direction of the AM antenna.
	Noise may be caused by interference from other equipment, such as a fluorescent light, motor, etc. Switch off or move the other equipment, or move the AM antenna.
Subwoofer output is very low.	To route more signal to the subwoofer, set it to **PLUS** or set the front speakers to **SMALL** (see Speaker Setting on page 114).
Everything seems to be set up correctly, but the playback sound is odd.	The speakers may be out of phase. Check that the positive/negative speaker terminals on the receiver are matched with the corresponding terminals on the speakers (see Connecting the speakers on page 26).
The Phase Control feature doesn't seem to have an audible effect.	If applicable, check that the lowpass filter switch on your subwoofer is off, or the lowpass cutoff is set to the highest frequency setting. If there is a PHASE setting on your subwoofer, set it to 0° (or depending on the subwoofer, the setting where you think it has the best overall effect on the sound).
	Make sure the speaker distance setting is correct for all speakers (see Speaker Distance on page 115).
Full Band Phase Control cannot be selected.	Perform Full Auto MCACC measurements (see Automatically conducting optimum sound tuning (Full Auto MCACC) on page 59). Full Band Phase Control automatically turns on once measurements are completed.
Can't select some Input functions by the **INPUT SELECTOR** on the front panel or the **ALL** button on the remote control.	Check the **Input Skip** settings in the **Input Setup** menu (see The Input Setup menu on page 61).
	Check the **HDMI Input** assignment in the **Input Setup** menu then try **OFF** (see The Input Setup menu on page 61).
There seems to be a time lag between the speakers and the output of the subwoofer.	See Automatically conducting optimum sound tuning (Full Auto MCACC) on page 59 to set up your system again using MCACC (this will automatically compensate for a delay in the subwoofer output).
The maximum volume available (shown in the front panel display) is lower than the **+12dB** maximum.	Check that the **Volume Limit** is set to **OFF** (see Volume Setup on page 116).
	The channel level setting may be over **0.0dB**.
Certain listening modes or **HOME MENU** items cannot be selected.	Some functions cannot be selected, depending on the input signal and listening mode.
The volume level drops automatically.	The temperature within the unit has exceeded the allowable value. Try moving the unit for better ventilation (see Installing the receiver on page 11).
Volume seems different when input is switched.	Set the **Channel Level** setting to **ALL**, then adjust the volume of the respective input sources (see Input Volume Absorber on page 94).

Symptom	Remedy
When **HDZONE** is **ON**, multi-channel audio sources are not output in the main zone.	When **HDZONE** is selected in **Speaker System** and also the same HDMI input is selected for both the main zone and HDZONE, 2-channel PCM audio sources are output from the main zone as well. To output multi-channel audio sources, set **HDZONE** to **OFF** or change the HDZONE input.
No HDZONE sound is output.	With HDZONE, multi-channel audio may not be output. In this case, set the audio output setting of your playback device to 2-channel PCM.

BT AUDIO

Symptom	Remedy
The *Bluetooth* wireless technology device cannot be connected or operated. Sound from the *Bluetooth* wireless technology device is not emitted or the sound is interrupted.	Check that no object that emits electromagnetic waves in the 2.4 GHz band (microwave oven, wireless LAN device or *Bluetooth* wireless technology apparatus) is near the unit. If such an object is near the unit, set the unit far from it. Or, stop using the object emitting the electromagnetic waves.
	Check that the *Bluetooth* wireless technology device is not too far from the unit and that obstructions are not set between the *Bluetooth* wireless technology device and the unit. Set the *Bluetooth* wireless technology device and the unit so that the distance between them is less than about 10 m (33 ft.) and no obstructions exist between them.
	The *Bluetooth* wireless technology device may not be set to the communication mode supporting the *Bluetooth* wireless technology. Check the setting of the *Bluetooth* wireless technology device.
	Check that pairing is correct. The pairing setting was deleted from this unit or the *Bluetooth* wireless technology device. Reset the pairing.
	Check that the profile is correct. Use a *Bluetooth* wireless technology device that supports A2DP profile and AVRCP profile.

Video

Symptom	Remedy
No image is output when an input is selected.	Check the video connections of the source component.
	For HDMI, or when **V.CONV** is set to **OFF** and a TV and another component are connected with different cords (in Setting the Video options on page 91), you must connect your TV to this receiver using the same type of video cable as you used to connect your video component. For the component video input, however, signals are only output from the **HDMI OUT 1** or **HDMI OUT 2** terminal, so when using the component video input, set **V.CONV** to **ON**.
	Make sure the input assignment is correct for components connected using component video or HDMI cables (see The Input Setup menu on page 61).
	Check the video output settings of the source component.
	Check that the video input you selected on your TV is correct.
	Some components (such as video game units) have resolutions that may not be converted. If adjusting this receiver's Resolution setting (in Setting the Video options on page 91) and/or the resolution settings on your component or display doesn't work, try switching **V.CONV** (in Setting the Video options on page 91) to **OFF**. When the device is connected using an **HDMI OUT** terminal, press the remote control's **OUT P.** button to check the **HDMI OUT** output setting. For **OUT 3**, also check the **MAIN/HDZONE** setting at **ZONE Setup**.
	When the **HDMI OUT 1/2** setting of the output parameter function is set to **OFF**, set it to **ON**.
	If HDZONE is set to on, video images connected using a video cable or component cable are not output from the HDMI terminal. To output video images, turn HDZONE off (page 95).
	When content that is protected by the HDCP 2.2 protocol is output from a source player, output of video is not possible on televisions and projectors that do not support HDCP 2.2. Please prepare a television or projector that supports HDCP 2.2. Also, this receiver's HDCP 2.2 compatible input terminals are **BD**, **HDMI IN 1**, and **HDMI IN 2**. When making connections other than the said terminal(s), please use these terminals instead.
Noisy, intermittent, or distorted picture.	Sometimes a video deck may output a noisy video signal (during scanning, for example), or the video quality may just be poor (with some video game units, for example). The picture quality may also depend on the settings, etc. of your display device. Reconnect the source and display device using the same type of connection (component or composite), then start playback again.
Video signals are not output from the component terminal.	When a monitor only compatible with resolutions of 480i is connected to the component terminal and another monitor is connected to the HDMI terminal, the video signals may not be output to the monitor connected to the component terminal. If this happens, do the following: — Turn off the power of the monitor connected to the HDMI terminal. — Change the **VIDEO P.** menu **SCAL** setting (see Setting the Video options on page 91). — Video signals from the HDMI terminal cannot be output to the component terminals. Input the video signals from the player or other source to the composite or component terminals. When using the component terminal, assign it at **Input Setup** (see The Input Setup menu on page 61).
The picture's movement is unnatural.	When Resolution under **VIDEO PARAMETER** is set to **1080/24p** or **4K/24p**, the picture may not be displayed properly for some source materials. In this case, set the resolution to something other than 1080/24p or 4K/24p (page 91).
Video parameters cannot be used.	For audio only input (TUNER, CD, and TV), the video parameter function cannot be used. Use for video or input with a GUI display.
	Cannot be used when the HDZONE is ON. Turn OFF the HDZONE.

Settings

Symptom	Remedy
The Auto MCACC Setup continually shows an error.	The ambient noise level may be too high. Keep the noise level in the room as low as possible (see also Problems when using the Auto MCACC Setup on page 61). If the noise level cannot be kept low enough, you will have to set up the surround sound manually (page 113).
	When using only one surround back speaker, connect it to the **SURROUND BACK L (Single)** terminals.
	To use a 5.1-channel speaker set, use the surround speakers for the surround channel, not the surround back channel.
	Make sure there are no obstacles between the speakers and the microphone.
	If **Reverse Phase** is displayed, try the following: — The speaker's wiring (+ and –) may be inverted. Check the speaker connections. — Depending on the type of speakers and their installation conditions, **Reverse Phase** may be displayed even if the speakers are properly connected. If this happens, select **GO NEXT** and continue. — If the speaker is not pointed to the microphone (listening position) or when using speakers that affect the phase (dipole speakers, reflective speakers, etc.), it may not be possible to properly identify the polarity.
After using the Auto MCACC Setup, the speaker size setting is incorrect.	There may have been some low frequency noise in the room from an air-conditioner, motor, etc. Switch off all other appliances in the room and use Auto MCACC Setup again.
	Depending on a number of factors (bass reproduction capabilities of the speakers, room size, speaker placement, etc.) this may occur in some cases. Change the speaker setting manually in Speaker Setting on page 114, and use the **ALL (Keep SP System)** option for the **Auto MCACC** menu in Automatic MCACC (Expert) on page 105 if this is a recurring problem.
Can't adjust the Fine Speaker Distance setting properly.	Check that the speakers are all in phase (make sure the positive (+) and negative (–) terminals are matched up properly).
SC-99 only: Gauge (value) does not increase with the **Precision Distance** adjustment.	Check that the speakers are all in phase (make sure the positive (+) and negative (–) terminals are matched up properly).
	Perform the **Full Auto MCACC** procedure before the **Precision Distance** adjustment (see Automatically conducting optimum sound tuning (Full Auto MCACC) on page 59).
	Place the microphone accurately in the same position as when the **Full Auto MCACC** procedure was performed.
	Do not move the speaker used as the reference point. Also, adjust in order, starting from the front right speaker.
	When adjusting the speaker positions, do not move the speakers much; only move them about 1 inch towards or away from the microphone.
	If you forget exactly where the microphone should be positioned or if there are problems after the procedure has been performed repeatedly, re-calibrate the distance using the **Full Auto MCACC** procedure, then without moving the microphone redo the **Precision Distance** adjustment.
The display shows **KEY LOCK ON** when you try to make settings.	With the receiver in standby, press ⏻ **STANDBY/ON** for about 5 seconds while holding down **SPEAKERS** to disable the key lock.
Most recent settings have been erased.	The power cord was disconnected from the wall while adjusting this setting.
	Settings are only stored if all the zones are turned off. Turn off all the zones before unplugging the power cord.
The various system settings are not stored.	Do not pull out the power cord while conducting the settings. (The settings will be stored when both the main zone and sub zone turn off. Turn off all zones before pulling out the power cord.)
Feels like there is no subwoofer EQ effect.	The effect becomes less when the set frequency value of the crossover frequency is low. When setting a high frequency value, the subwoofer EQ effect becomes stronger. However, setting a higher crossover frequency increases the share that the subwoofer bears for low-frequency playback. For that reason, it is disadvantageous in terms of the phase point of view. Set to your preference.

Professional Calibration EQ graphical output

Symptom	Remedy
The reverb characteristics graph after EQ calibration does not appear entirely flat.	There are cases where the graph does not appear flat (even when selecting **ALL CH ADJ** in the Auto MCACC Setup) due to adjustments made to compensate for room characteristics to achieve optimal sound.
	Areas of the graph may appear identical (before and after) when there is little or no adjustment needed.
	The graph may appear to have shifted vertically when comparing before and after measurements.
EQ adjustments made using the Manual MCACC setup do not appear to change the reverb characteristics graph after EQ calibration.	Despite level adjustments being made, the filters used for analysis may not display these adjustments in the reverb characteristics graph after EQ calibration. However, these adjustments are taken into account by the filters dedicated to overall system calibration.
Lower frequency response curves do not seem to have been calibrated for **SMALL** speakers.	Low frequencies used in bass management (the subwoofer channel) will not change for speakers that have been specified as **SMALL** in the configuration, or do not output these frequencies.
	Calibration is performed, but due to your speakers' low frequency limitations, no measurable sound is output for display.

Display

Symptom	Remedy
The display is dark or off.	Press **DIMMER** repeatedly to select a different brightness.
The OSD screen is not displayed.	The on-screen display is not displayed unless this receiver's **HDMI OUT 1** or **HDMI OUT 2** terminal is connected to the TV by HDMI cable. If the TV does not support HDMI, watch this receiver's front panel display when performing operations and making settings.
	When the input is a 3D signal, OSD cannot be displayed.
Even through the input is switched, **DIGITAL** does not light.	Check the digital connections and make sure that the digital inputs are assigned correctly (see The Input Setup menu on page 61).
When playing Dolby Digital or DTS sources, the receiver's format indicators do not light.	Check that the player isn't set up so that Dolby Digital and DTS sources are converted to PCM.
	Ensure that if there are several audio tracks on the disc, the Dolby Digital or DTS is selected.
When **AUTO** is set with the Auto Phase Control Plus feature, '---' is displayed.	There are disks that cannot be adjusted using **AUTO**. Please adjust manually (page 89).

Remote control

Symptom	Remedy
Cannot be remote controlled.	Set the remote control unit's remote control mode so that it matches the setting on the main unit (see Operating multiple receivers on page 99).
	Check whether the receiver's remote control mode is properly set (see Remote Control Mode Setup on page 117).
	Try replacing the batteries in the remote control (see Loading the batteries on page 11).
	Be sure to operate within 7 m (23 ft.) and a 30° angle of the remote sensor on the front panel (see Operating range of remote control unit on page 11).
	Check that there are no obstacles between the receiver and the remote control.
	Make sure that there is no fluorescent or other strong light shining on to the remote sensor.
Other components can't be operated with the system remote.	If the battery ran down, the preset codes may have been cleared. Re-enter the preset codes.
	The preset code may be incorrect. Redo the procedure for entering preset codes.
	When commands from the remote control units of other devices are registered using the learning function, in some cases they may not be learned properly. In this case, register the commands again using the learning function (see page 100). If they still do not work, they may be in a special format that cannot be registered on this receiver's remote control. Operate the device using another remote control.

HDMI

Symptom	Remedy
The **HDMI** indicator blinks continuously.	Check all the points below.
Video/audio is not output or is interrupted.	This receiver is HDCP-compatible. Check that the components you are connecting are also HDCP-compatible. If they are not, please connect them using the component or composite video jacks.
	Depending on the connected source component, it's possible that it will not work with this receiver (even if it is HDCP-compatible). In this case, connect using the component or composite video jacks between source and receiver.
	If the problem still persists when connecting your HDMI component directly to your monitor, please consult the component or monitor manual or contact the manufacturer for support.
	If video images do not appear on your TV, try adjusting the resolution, Deep Color or other setting for your component.
	While analog video signals are being output over HDMI, use a separate connection for audio output.
	To output signals in Deep Color, use an HDMI cable (High Speed HDMI®/™ Cable) to connect this receiver to a component or TV with the Deep Color feature.
The picture and sound output get cut off, or there is no output produced.	Influence from a TV whose power is set to standby may cause the picture or sound output to not be produced or to get cut off. In this case, press **OUT P.**, and make sure to use an output other than the HDMI output to which that TV is connected.
No picture.	Try changing the **SCAL** setting (in Setting the Video options on page 91).
	To use the **HDMI OUT 3** terminal in the main zone, set the **MAIN/HDZONE Output Setting** to **MAIN** (page 117).

Symptom	Remedy
No sound, or sound suddenly ceases.	Check that the HDMI Audio setting is set to **AMP** (Setting the Audio options on page 89).
	If the component is a DVI device, use a separate connection for the audio.
	If analog video is being output over HDMI, please use a separate connection for the audio.
	Check the audio output settings of the source component.
	HDMI format digital audio transmissions require a longer time to be recognized. Due to this, interruption in the audio may occur when switching between audio formats or beginning playback.
	Turning on/off the device connected to this unit's **HDMI OUT** terminal during playback, or disconnecting/connecting the HDMI cable during playback, may cause noise or interrupted audio.
Noisy or distorted picture.	Sometimes a video deck may output a noisy video signal (during scanning, for example), or the video quality may just be poor (with some video game units, for example). The picture quality may also depend on the settings, etc. of your display device. Switch off the video converter and reconnect the source and display device using the same type of connection (component or composite), then start playback again.
	If the problem still persists when connecting your HDMI component directly to your monitor, please consult the component or monitor manual or contact the manufacturer for support.
Synchronized operation not possible using **Control** with HDMI function.	Check the HDMI connections.
	The cable may be damaged.
	Select **ON** for the **Control Mode** with HDMI setting (see HDMI Setup on page 85).
	Turn the TV's power on before turning on this receiver's power.
	Set the TV side Control with HDMI setting to on (see TV's operating instructions).
	Connect the TV to the **HDMI OUT 1** terminal and set the HDMI output to **OUT 1**. Then turn on first the TV's power, then this receiver's power.
When **HDZONE** is set to ON, the video resolution and number of audio channels for the main zone side changes.	This is due to the HDMI connection specifications; it is not a malfunction. When playing the same input in the main zone and **HDZONE**, video and audio signals that can be output in common for all the devices connected to the **HDMI OUT 1**, **HDMI OUT 2** and **HDMI OUT 3 (HDZONE)** terminals are set.
HDZONE cannot be turned on.	Set **Output Setting** at **MAIN/HDZONE** to **HDZONE** (page 117).
When the input source for the main or HDZONE is switched or when the power of the respective zones is turned on and off, the audio or video of the HDMI output terminal that is not being operated is sometimes interrupted.	This is because the HDMI devices need to recognize each other again. This is not a malfunction. If the picture is disturbed or not displayed, turn off the power of the devices in all the zones, then try again. Also try temporarily turning the **Network Standby** and **Standby Through** settings **OFF**.
Such menus as the **HOME MENU** as well as the on-screen display are not displayed for **HDMI OUT 1** or **HDMI OUT 2**.	Press **OUT P.** and switch the HDMI OUT 1/2 setting.
Cannot upscale to 4K.	Change **V.CONV** to **ON**. (page 91)
	Change **SCAL**. (page 91)
	When HDZONE is turned on, upscaling cannot be performed. To perform upscaling, turn off HDZONE (page 95).

Symptom	Remedy
4K video is not output even though a 4K compliant TV is connected.	When the **MAIN/HDZONE** setting is **MAIN** and the HDMI output setting is **OUT 1+2** and when the **MAIN/HDZONE** setting is **HDZONE** and HDZONE is the same input as with the main zone, video is output with the lower resolution of the TV connected to **HDMI OUT 1** and **HDMI OUT 2**. When there is only one 4K compliant TV, connect it to **HDMI OUT 1** and set the HDMI output setting to **OUT 1** or turn off HDZONE so that video is only output to the 4K compliant TV.
Even though a 4K/60p 4:4 4 24 bit compatible TV is connected, the 4K/60p 4:4:4 24 bit video image is not output correctly.	Set the HDMI 4K/60p signal input setting to **4:4:4** (page 94).
	When the HDMI cable does not support 4K/60p 4 4 4 24 bit (18 Gbps transmission), video images may not be output properly. In that case, replace the cable with a compatible HDMI cable or change the HDMI 4K/60p signal input setting to **4:2:0** to watch the 4K/60p 4:2:0 24 bit video image.
	The **HDMI OUT 3** terminal does not output a 4K/60p 4:4:4 24 bit video image if **MAIN/HDZONE** is set to **HDZONE**. Set **MAIN/HDZONE** to **MAIN** or use the **HDMI OUT 1** or **HDMI OUT 2** terminals.
	You cannot input 4K/60p 4:4:4 24 bit video from **HDMI IN 3** to the **IN 7** terminal. Use the **BD IN**, **HDMI IN 1** or **HDMI IN 2** terminal.

MHL

Symptom	Remedy
When playing an MHL-compatible device connected to the **HDMI 7/MHL** terminal, the Standby Through function does not work and the power turns off.	The MHL device will not operate unless power is being supplied from this receiver. When this receiver is in the Standby Through mode, power cannot be supplied due to reduced power consumption. Because of this, the MHL device will not operate. This is not a malfunction.
MHL-compatible device cannot be operated with the remote control.	Press **MHL** to set the remote control to the MHL control mode.
MHL POW ERR is displayed on the display.	There is a problem with the power supply for the MHL device. After turning OFF the receiver, disconnect the MHL device, connect the MHL device again and then turn ON the power of the receiver. If the error is displayed even though the above operation is repeated several times, there is a problem with the receiver or the MHL device. Disconnect the power cable and request repair.

Built-in AVNavigator

Symptom	Cause	Remedy
AVNavigator does not interact well with the receiver.	The receiver's power is not turned on.	Turn the receiver's power on. (Wait about 60 seconds after the power turns on for network functions to start.)
	The receiver or computer is not connected to the LAN.	Connect a LAN cable to the receiver or computer (page 47).
	The router's power is off.	Turn the router's power on.
	Network connections could be restricted due to the computer's network settings, security settings, etc.	Check the computer's network settings, security settings, etc.

Symptom	Cause	Remedy
In the middle of **Wiring Navi**, you are instructed to turn off the power of the unit and then connect other equipment or speakers.	This is to avoid failure of the receiver due to a short-circuit between cables or from static electricity.	Per the **Wiring Navi** instructions, turn OFF the power of the receiver. As long as the browser has not quit, **Wiring Navi** resumes guidance upon turning ON the receiver.
When the **Wiring Navi** or **Interactive Operation Guide** is launched, a warning about security protection appears on the browser.	This is because of the browser's security function.	This is not a problem. Perform the operation to authorize the blocked contents.
AVNavigator screen is not displayed on the browser.	This receiver's IP address has not been entered into the browser correctly.	Check the receiver's IP address and enter it correctly in the browser (page 58).
Receiver settings cannot be made from a browser.	JavaScript is disabled on the internet browser.	Enable JavaScript.
	The browser is not compatible with JavaScript.	Use an internet browser that is compatible with JavaScript.

USB interface

Symptom	Cause	Remedy
The folders/files stored on a USB memory device are not displayed.	The folders/files are currently stored in a region other than the FAT (File Allocation Table) region.	Store the folders/files in the FAT region.
	The number of levels in a folder is more than 9.	Limit the maximum number of levels in a folder to 9 (page 66).
	The audio files are copyrighted.	Copyrighted audio files stored on a USB memory device cannot be played back (page 66).
A USB memory device is not recognized.	The USB memory device does not support the mass storage class specifications.	Try using a USB memory device compatible with the mass storage class specifications. Note that there are cases where even the audio files stored on a USB memory device compatible with the mass storage class specifications are not played back on this receiver (page 66).
		Connect the USB memory device and switch on this receiver (page 48).
	A USB hub is currently being used.	This receiver does not support USB hubs (page 66).
	This receiver recognizes the USB memory device as a fraud.	Switch off and on again this receiver.
		Reconnect the USB device with the receiver switched off.
		Change to an input other than iPod/USB, then set the input back to iPod/USB.
A USB memory device is connected and displayed, but the audio files stored on the USB memory device cannot be played back.	Some formats of USB memory devices, including FAT 12, NTFS, and HFS, cannot be played back on this receiver.	Check whether the format of your USB memory device is either FAT 16 or FAT 32. Note that the FAT 12, NTFS, and HFS formats cannot be played back on this receiver (page 66).
	The file format cannot be properly played back on this receiver.	See the list of file formats that can be played back on this receiver (page 67).

Symptom	Cause	Remedy
The USB memory cannot be operated with the remote control.	—	Press **iPod USB** to set the remote control to the iPod USB control mode.
Over Current shows in the display.	—	There is a problem with the power supply for the USB memory. After turning off the receiver, disconnect the USB memory, connect the USB memory again and then turn on the power of the receiver. If **Over Current** is displayed even though the above operation is repeated several times, there is a problem with the receiver or USB memory. Disconnect the power cable and request repair.

iPod

Symptom	Cause	Remedy
iPod is not recognized.	This receiver recognizes the iPod as a fraud.	Switch off and on again this receiver.
		Reconnect the iPod with the receiver switched off.
		Change to an input other than iPod/USB, then set the input back to iPod/USB.
iPod touch/iPhone is not recognized or otherwise does not operate properly.	The iPod's operation may be unstable.	Try performing the operation below. 1. Press the sleep/sleep cancel button on the iPod touch/iPhone simultaneously with the home button for at least 10 seconds to restart the device. 2. Turn this receiver's power on. 3. Connect the iPod touch/iPhone to this receiver.
iPod cannot be operated with the remote control.	—	Press **iPod USB** to set the remote control to the iPod USB control mode.
No audio is output when operating from an iPod.	—	Press **iPod iPhone DIRECT CONTROL** on the front panel, to switch to iPod operation.

Network

Symptom	Cause	Remedy
Cannot access the network.	The LAN cable is not firmly connected.	Firmly connect the LAN cable (page 47).
	The router is not switched on.	Switch on the router.
	Internet security software is currently installed in the connected component.	There are cases where a component with Internet security software installed cannot be accessed.
	The audio component on the network which has been switched off is switched on.	Switch on the audio component on the network before switching on this receiver.
Fails Wireless Accessory Configuration.	iOS equipment is not connected to the Wi-Fi equipment.	Connect the iOS equipment to Wi-Fi.
Playback does not start while "**Connecting...**" continues to be displayed.	The component is currently disconnected from this receiver or the power supply.	Check whether the component is properly connected to this receiver or the power supply.

Symptom	Cause	Remedy
The network function cannot be operated with the remote control.	—	Press **NET** to set the remote control to the network function control mode.
The PC or Internet radio is not properly operated.	The corresponding IP address is not properly set.	Switch on the built-in DHCP server function of your router, or set up the network manually according to your network environment (page 53).
	The IP address is being automatically configured.	The automatic configuration process takes time. Please wait.
The audio files stored on components on the network, such as a PC, cannot be played back.	Windows Media Player 11 or Windows Media Player 12 is not currently installed on your PC.	Install Windows Media Player 11 or Windows Media Player 12 on your PC (page 78).
	The audio file currently being played back was not recorded in a format playable on this receiver.	Audio files recorded in MPEG-4 AAC or FLAC cannot be played back on Windows Media Player 11 or Windows Media Player 12. Try using another server. Refer to the operation manual supplied with your server.
	The component connected to the network is not properly operated.	Check whether the component is affected by special circumstances or is in the sleep mode. Try rebooting the component if necessary.
	The component connected to the network does not permit file sharing.	Try changing the settings for the component connected to the network.
	The folder stored on the component connected to the network has been deleted or damaged.	Check the folder stored on the component connected to the network.
	Network connections could be restricted due to the computer's network settings, security settings, etc.	Check the computer's network settings, security settings, etc.
	Supported file formats vary by server. As such, files not supported by your server are not displayed on this unit.	For more information check with the manufacturer of your server.
	The audio files are copyrighted.	DRM-protected audio files cannot be played back on this receiver.
Cannot access the component connected to the network.	The component connected to the network is not properly set.	If the client is automatically authorized, you need to enter the corresponding information again. Check whether the connection status is set to "Do not authorize".
	There are no playable audio files on the component connected to the network.	Check the audio files stored on the component connected to the network.

Symptom	Cause	Remedy
Audio playback is undesirably stopped or disturbed.	The audio file currently being played back was not recorded in a format playable on this receiver.	Check whether the audio file was recorded in a format supported by this receiver. Check whether the folder has been damaged or corrupted. Note that there are cases where even the audio files listed as playable on this receiver cannot be played back or displayed (page 83).
	The LAN cable is currently disconnected.	Connect the LAN cable properly (page 47).
	There is heavy traffic on the network with the Internet being accessed on the same network.	Use 100BASE-TX to access the components on the network.
	When in the DMR mode, depending on the external controller being used, playback may be interrupted when a volume operation is performed from the controller.	In this case, adjust the volume from the receiver or remote control.
	There is a connection routed through a wireless LAN on the same network.	The band frequency used for wireless LAN may not be sufficient. Connect using wired LAN.
		Place away from equipment that releases band frequency electromagnetic waves used in wireless LAN communications (microwave oven, game console, etc.). If there is still no improvement, stop using other equipment that releases electromagnetic waves.
Entry of password is requested when starting AirPlay.	—	Enter the password set with **AirPlay Password** at Wireless Accessory Configuration or **Network Option**. If you have forgotten the password, it can be reset.
Cannot access Windows Media Player 11 or Windows Media Player 12.	*In case of Windows Media Player 11:* You are currently logged onto the domain through your PC with Windows Vista installed. *In case of Windows Media Player 12:* You are currently logged onto the domain through your PC with Windows 7 or Windows 8 installed.	Instead of logging onto the domain, log onto the local machine (page 79).
Cannot listen to Internet radio stations.	The firewall settings for components on the network are currently in operation.	Check the firewall settings for components on the network.
	You are currently disconnected from the Internet.	Check the connection settings for components on the network, and consult with your network service provider if necessary (page 53).
	The broadcasts from an Internet radio station are stopped or interrupted.	There are cases where you cannot listen to some Internet radio stations even when they are listed in the list of Internet radio stations on this receiver (page 79).

Symptom	Cause	Remedy
This unit cannot be selected from the Spotify application.	—	An Internet connection is required for both the mobile digital device and this unit.
		Connect the mobile digital device by Wi-Fi to the wireless LAN router of the same network as the one to which this unit is connected.
		A Spotify Premium account (for a charge) must be registered on the Spotify application.
		When this unit is in standby, it cannot be selected from the Spotify application.
The sound of the Spotify audio stream is not produced.	—	Check whether this unit is selected on the Spotify application.
		Check that contents are playing on the Spotify application.
		If the above does not solve the problem, turn this unit's power off then back on.
	With an AV receiver that has the '**Network, Bluetooth**' → '**Network Option**' → '**Play ZONE Setup**' option, the sound may be playing in another zone.	If this is the case, set which zone the sound is to be played in at the play zone settings.
This unit's volume does not increase when the volume slider in the Spotify application is raised.	A volume upper limit is provided so that the volume will not inadvertently go up too much.	To further increase the volume, use the remote control. When the iControlAV5 or built-in AVNavigator application is being used, you can use the application to increase the volume.
Playback continues on this unit when the Spotify application is quit.	The Spotify audio stream continues from this unit, even when the Spotify application is quit.	To operate again, relaunch the Spotify application.
The main power cannot be turned on with iControlAV5 and the like during network standby.	When network communication is disconnected during network standby, the device switches to normal standby mode to reduce power consumption during standby.	Turn the main power on with the button on the remote control or main device.
When DMR mode or AirPlay is used from a computer, smartphone, etc., the sound is played in subzone.	**Play ZONE Setup** is not set to **MAIN**.	Change **Play ZONE Setup** to **MAIN** (page 59).
SC-99 only: AirPlay or DMR mode cannot be used for subzone.	When **USB-DAC** input is selected for any of sub zones, AirPlay and DMR mode cannot be used for other sub zone.	Switch the sub-zone in which the **USB-DAC** input is selected to a different input.

USB-DAC

SC-99 only

Symptoms	Causes	Remedies
When the **USB-DAC IN** terminal is connected to a PC via USB cable, audio files on the PC cannot be played.	Has the proper device driver been installed on the PC?	When using a USB cable to connect the unit's **USB-DAC IN** terminal to a PC in order to play audio files on the PC, the proper device driver must be downloaded from the supplied CD-ROM and installed on your PC.
No sound is produced when attempting to play files on a PC.	Are volume settings correct for the OS and application program?	Raise the volume settings as required.
	Is the OS audio output set to MUTE?	Cancel the MUTE setting.
	Are multiple applications running simultaneously?	Try closing applications that are not in use.
	Are volume settings correct for the OS and application program?	For audio device select "Pioneer USB Audio Device".
High sound quality files (over 48 kHz/24 bits) cannot be played.	The exclusive driver is not installed on the computer.	Install the driver software on the computer from the included CD-ROM.

Wireless LAN

Symptoms	Causes	Remedies
Network cannot be accessed via wireless LAN.	SSID uses double-byte characters such as in the Japanese language.	This receiver is compatible only with single-byte alphanumerical characters and some symbols such as the underbar. If characters other than these are used, change the SSID before executing network settings. Refer to the user's manual for your router for information on SSID.
	There is distance or obstacles between this receiver and equipment including the wireless LAN router.	Improve the wireless LAN environment such as making the distance between this receiver and equipment including wireless LAN router closer.
	There is a microwave oven or other device generating electromagnetic waves near the wireless LAN environment.	Use the system in a place away from microwave ovens or others device generating electromagnetic waves.
		Avoid using devices generating electromagnetic waves as much as possible when using the system with the wireless LAN.
	Multiple devices are connected to the wireless LAN router.	When connecting multiple devices to the wireless LAN router, the IP address of the connected devices must be changed.
	The wireless LAN connection settings of this receiver and equipment such as wireless LAN router is not correct.	When wireless LAN connections for this receiver and wireless LAN router are not setup, the connection between this receiver and equipment such as the wireless LAN router must be set.
	The IP address settings of this receiver do not match the settings of the wireless LAN router and the like.	Check the IP address settings (including DHCP settings) of this receiver. If the receiver's DHCP setting is "ON", turn the receiver's power off, then turn the power back on. Check that the IP address for this receiver matches the settings of the wireless LAN router. If the receiver's DHCP setting is "OFF", set an IP address matching the network of the base unit (wireless LAN router, etc.). For example, if the wireless LAN router's IP address is "192.168.1.1", set the receiver's IP address to "192.168.1 XXX" (*1), the subnet mask to "255.255 255.0", the gateway and DNS to "192.168.1.1". (*1) Set the "XXX" in "192.168.1.XXX" to a number between 2 and 248 that is not assigned to other devices.
	The access point is set to conceal the SSID.	In this case, it may not be shown in the access point list screen. If it is not shown, set the SSID etc. of this receiver.
	The access point's security settings use WEP 152-bit length code key or shared key authentication.	The receiver does not support WEP 152-bit length code key or shared key authentication.
	There is a possibility that the channel used by the wireless network is a wireless channel that cannot be used with this receiver.	Change the wireless network channel to a wireless channel that can be used with this receiver, then check the connection.
Wireless Direct is not connected when the main power of this receiver is turned off once and turned on again.	The **Security Protocol** is set to **None**.	Because there are security risks, settings are necessary to connect to Wireless Direct again. Set **Security Protocol** of **Wireless Direct** to **WEP** (page 58).

Additional information

About Wi-Fi® 132
SABRE DAC™ 132
About HDMI 132
HTC Connect 132
About iPod 132
Windows 8 132
MHL 133
About *Bluetooth* wireless technology 133
High-Resolution Audio 133
Software license notice 133
Surround sound formats 138
Auto Surround, ALC and Stream Direct with different input signal formats 139
Speaker Setting Guide 140
About messages displayed when using network functions 141
Important information regarding the HDMI connection 141
Cleaning the unit 141
Glossary 142
Features index 145
Specifications 146
Preset code list 148

About Wi-Fi®

The Wi-Fi CERTIFIED Logo is a certification mark of Wi-Fi Alliance.

The Wi-Fi Protected Setup Identifier Mark is a certification mark of Wi-Fi Alliance.

SABRE DAC™

SABRE DAC™ and the logo are trademarks of ESS Technology, Inc.

About HDMI

HDMI (High-Definition Multimedia Interface) is a digital transfer standard for receiving video and audio data with a single cable. It is an adaptation of DVI (Digital Visual Interface), a display connection technology, for use in home audio devices. This interface standard is for next-generation TVs providing High-bandwidth Digital Content Protection (HDCP).

The terms HDMI and HDMI High-Definition Multimedia Interface, and the HDMI Logo are trademarks or registered trademarks of HDMI Licensing, LLC in the United States and other countries.

HTC Connect

HTC, HTC Connect and the HTC Connect logo are trademarks of HTC Corporation.

About iPod

AirPlay works with iPhone, iPad, and iPod touch with iOS 4.3.3 or later, Mac with OS X Mountain Lion or later, and PC with iTunes 10.2.2 or later.
USB works with iPhone 6 Plus, iPhone 6, iPhone 5s, iPhone 5c, iPhone 5, iPhone 4s, iPhone 4, iPhone 3GS, iPod touch (4th through 5th generation) and iPod nano (4th through 7th generation).
"Made for iPod" and "Made for iPhone" mean that an electronic accessory has been designed to connect specifically to iPod or iPhone, respectively, and has been certified by the developer to meet Apple performance standards. Apple is not responsible for the operation of this device or its compliance with safety and regulatory standards. Please note that the use of this accessory with iPod or iPhone may affect wireless performance.
Apple, AirPlay, iPad, iPhone, iPod, iPod nano, iPod touch, iTunes, Safari, Bonjour, Mac, Mac OS and OS X are trademarks of Apple Inc., registered in the U.S. and other countries.
The AirPlay logo is a trademark of Apple Inc.
App Store is a service mark of Apple Inc.

Windows 8

This product is Windows 8 Compatible.

Windows® and the Windows logo are trademarks of the Microsoft group of companies.

MHL

MHL, the MHL Logo, and Mobile High-Definition Link are trademarks or registered trademarks of MHL, LLC in the United States and other countries.

About *Bluetooth* wireless technology

The *Bluetooth*® word mark and logos are registered trademarks owned by Bluetooth SIG, Inc. and any use of such marks by PIONEER CORPORATION is under license. Other trademarks and trade names are those of their respective owners.

High-Resolution Audio

The product with this logo is conformed to Hi-Res Audio standard defined by Japan Audio Society. This logo is used under license from Japan Audio Society.

Software license notice

The licenses for the open source software used on this receiver are shown below. For accuracy purposes, here we have included the original texts (in English).

Apple Lossless Audio Codec

Copyright © 2011 Apple Inc. All rights reserved.
Licensed under the Apache License, Version 2.0. You may obtain a copy of the License at
http://www.apache.org/licenses/LICENSE-2.0

FLAC Decoder

Copyright © 2000, 2001, 2002, 2003, 2004, 2005, 2006, 2007, 2008, 2009
Josh Coalson
Redistribution and use in source and binary forms, with or without modification, are permitted provided that the following conditions are met:

- Redistributions of source code must retain the above copyright notice, this list of conditions and the following disclaimer.
- Redistributions in binary form must reproduce the above copyright notice, this list of conditions and the following disclaimer in the documentation and/or other materials provided with the distribution.
- Neither the name of the Xiph.org Foundation nor the names of its contributors may be used to endorse or promote products derived from this software without specific prior written permission.

THIS SOFTWARE IS PROVIDED BY THE COPYRIGHT HOLDERS AND CONTRIBUTORS “AS IS” AND ANY EXPRESS OR IMPLIED WARRANTIES, INCLUDING, BUT NOT LIMITED TO, THE IMPLIED WARRANTIES OF MERCHANTABILITY AND FITNESS FOR A PARTICULAR PURPOSE ARE DISCLAIMED. IN NO EVENT SHALL THE FOUNDATION OR CONTRIBUTORS BE LIABLE FOR ANY DIRECT, INDIRECT, INCIDENTAL, SPECIAL, EXEMPLARY, OR CONSEQUENTIAL DAMAGES (INCLUDING, BUT NOT LIMITED TO, PROCUREMENT OF SUBSTITUTE GOODS OR SERVICES; LOSS OF USE, DATA, OR PROFITS; OR BUSINESS INTERRUPTION) HOWEVER CAUSED AND ON ANY THEORY OF LIABILITY, WHETHER IN CONTRACT, STRICT LIABILITY, OR TORT (INCLUDING NEGLIGENCE OR OTHERWISE) ARISING IN ANY WAY OUT OF THE USE OF THIS SOFTWARE, EVEN IF ADVISED OF THE POSSIBILITY OF SUCH DAMAGE.

Bonjour

Apple provides developers the opportunity to license and use Apple software, technologies and Apple trademarks to build successful products.
Developers are free to use the Apple mDNSResponder source code under the terms of the Apache 2.0 license.
You may obtain a copy of the License at http://www.apache.org/licenses/LICENSE-2.0.

OpenSSL

The OpenSSL toolkit stays under a dual license, i.e. both the conditions of the OpenSSL License and the original SSLeay license apply to the toolkit.
See below for the actual license texts. Actually both licenses are BSD-style Open Source licenses. In case of any license issues related to OpenSSL please contact openssl-core@openssl.org.

OpenSSL License

Copyright (c) 1998-2011 The OpenSSL Project. All rights reserved.
Redistribution and use in source and binary forms, with or without modification, are permitted provided that the following conditions are met:

1 Redistributions of source code must retain the above copyright notice, this list of conditions and the following disclaimer.
2 Redistributions in binary form must reproduce the above copyright notice, this list of conditions and the following disclaimer in the documentation and/or other materials provided with the distribution.
3 All advertising materials mentioning features or use of this software must display the following acknowledgment:
"This product includes software developed by the OpenSSL Project for use in the OpenSSL Toolkit. (http://www.openssl.org/)"
4 The names "OpenSSL Toolkit" and "OpenSSL Project" must not be used to endorse or promote products derived from this software without prior written permission. For written permission, please contact openssl-core@openssl.org.
5 Products derived from this software may not be called "OpenSSL" nor may "OpenSSL" appear in their names without prior written permission of the OpenSSL Project.
6 Redistributions of any form whatsoever must retain the following acknowledgment:
"This product includes software developed by the OpenSSL Project for use in the OpenSSL Toolkit (http://www.openssl.org/)"

THIS SOFTWARE IS PROVIDED BY THE OpenSSL PROJECT ``AS IS" AND ANY EXPRESSED OR IMPLIED WARRANTIES, INCLUDING, BUT NOT LIMITED TO, THE IMPLIED WARRANTIES OF MERCHANTABILITY AND FITNESS FOR A PARTICULAR PURPOSE ARE DISCLAIMED. IN NO EVENT SHALL THE OpenSSL PROJECT OR ITS CONTRIBUTORS BE LIABLE FOR ANY DIRECT, INDIRECT, INCIDENTAL, SPECIAL, EXEMPLARY, OR CONSEQUENTIAL DAMAGES (INCLUDING, BUT NOT LIMITED TO, PROCUREMENT OF SUBSTITUTE GOODS OR SERVICES; LOSS OF USE, DATA, OR PROFITS; OR BUSINESS INTERRUPTION) HOWEVER CAUSED AND ON ANY THEORY OF LIABILITY, WHETHER IN CONTRACT, STRICT LIABILITY, OR TORT (INCLUDING NEGLIGENCE OR OTHERWISE) ARISING IN ANY WAY OUT OF THE USE OF THIS SOFTWARE, EVEN IF ADVISED OF THE POSSIBILITY OF SUCH DAMAGE.
This product includes cryptographic software written by Eric Young (eay@cryptsoft.com). This product includes software written by Tim Hudson (tjh@cryptsoft.com).

Original SSLeay License

Copyright (C) 1995-1998 Eric Young (eay@cryptsoft.com)
All rights reserved.
This package is an SSL implementation written by Eric Young (eay@cryptsoft.com).
The implementation was written so as to conform with Netscapes SSL.
This library is free for commercial and non-commercial use as long as the following conditions are aheared to.
The following conditions apply to all code found in this distribution, be it the RC4, RSA, lhash, DES, etc., code; not just the SSL code. The SSL documentation included with this distribution is covered by the same copyright terms except that the holder is Tim Hudson (tjh@cryptsoft.com).
Copyright remains Eric Young's, and as such any Copyright notices in the code are not to be removed.
If this package is used in a product, Eric Young should be given attribution as the author of the parts of the library used.
This can be in the form of a textual message at program startup or in documentation (online or textual) provided with the package.
Redistribution and use in source and binary forms, with or without modification, are permitted provided that the following conditions are met:

1 Redistributions of source code must retain the copyright notice, this list of conditions and the following disclaimer.
2 Redistributions in binary form must reproduce the above copyright notice, this list of conditions and the following disclaimer in the documentation and/or other materials provided with the distribution.
3 All advertising materials mentioning features or use of this software must display the following acknowledgement:
"This product includes cryptographic software written by Eric Young (eay@cryptsoft.com)"
The word 'cryptographic' can be left out if the rouines from the library being used are not cryptographic related :-).
4 If you include any Windows specific code (or a derivative thereof) from the apps directory (application code) you must include an acknowledgement:
"This product includes software written by Tim Hudson (tjh@cryptsoft.com)"

THIS SOFTWARE IS PROVIDED BY ERIC YOUNG ``AS IS" AND ANY EXPRESS OR IMPLIED WARRANTIES, INCLUDING, BUT NOT LIMITED TO, THE IMPLIED WARRANTIES OF MERCHANTABILITY AND FITNESS FOR A PARTICULAR PURPOSE ARE DISCLAIMED. IN NO EVENT SHALL THE AUTHOR OR CONTRIBUTORS BE LIABLE FOR ANY DIRECT, INDIRECT, INCIDENTAL, SPECIAL, EXEMPLARY, OR CONSEQUENTIAL DAMAGES (INCLUDING, BUT NOT LIMITED TO, PROCUREMENT OF SUBSTITUTE GOODS OR SERVICES; LOSS OF USE, DATA, OR PROFITS; OR BUSINESS INTERRUPTION) HOWEVER CAUSED AND ON ANY THEORY OF LIABILITY, WHETHER IN CONTRACT, STRICT LIABILITY, OR TORT (INCLUDING NEGLIGENCE OR OTHERWISE) ARISING IN ANY WAY OUT OF THE USE OF THIS SOFTWARE, EVEN IF ADVISED OF THE POSSIBILITY OF SUCH DAMAGE.
The licence and distribution terms for any publically available version or derivative of this code cannot be changed. i.e. this code cannot simply be copied and put under another distribution licence
[including the GNU Public Licence.]

WPA Supplicant

Copyright (c) 2003-2015, Jouni Malinen <j@w1.fi> and contributors
All rights reserved.
This program is licensed under the BSD license (the one with advertisement clause removed).
If you are submitting changes to the project, please see CONTRIBUTIONS file for more instructions.

License

This software may be distributed, used, and modified under the terms of BSD license:
Redistribution and use in source and binary forms, with or without modification, are permitted provided that the following conditions are met:

1 Redistributions of source code must retain the above copyright notice, this list of conditions and the following disclaimer.
2 Redistributions in binary form must reproduce the above copyright notice, this list of conditions and the following disclaimer in the documentation and/or other materials provided with the distribution.
3 Neither the name(s) of the above-listed copyright holder(s) nor the names of its contributors may be used to endorse or promote products derived from this software without specific prior written permission.

THIS SOFTWARE IS PROVIDED BY THE COPYRIGHT HOLDERS AND CONTRIBUTORS "AS IS" AND ANY EXPRESS OR IMPLIED WARRANTIES, INCLUDING, BUT NOT LIMITED TO, THE IMPLIED WARRANTIES OF MERCHANTABILITY AND FITNESS FOR A PARTICULAR PURPOSE ARE DISCLAIMED. IN NO EVENT SHALL THE COPYRIGHT OWNER OR CONTRIBUTORS BE LIABLE FOR ANY DIRECT, INDIRECT, INCIDENTAL, SPECIAL, EXEMPLARY, OR CONSEQUENTIAL DAMAGES (INCLUDING, BUT NOT LIMITED TO, PROCUREMENT OF SUBSTITUTE GOODS OR SERVICES; LOSS OF USE, DATA, OR PROFITS; OR BUSINESS INTERRUPTION) HOWEVER CAUSED AND ON ANY THEORY OF LIABILITY, WHETHER IN CONTRACT, STRICT LIABILITY, OR TORT (INCLUDING NEGLIGENCE OR OTHERWISE) ARISING IN ANY WAY OUT OF THE USE OF THIS SOFTWARE, EVEN IF ADVISED OF THE POSSIBILITY OF SUCH DAMAGE.

Boost

Boost Software License - Version 1.0 - August 17th, 2003
Permission is hereby granted, free of charge, to any person or organization obtaining a copy of the software and accompanying documentation covered by this license (the “Software”) to use, reproduce, display, distribute, execute, and transmit the Software, and to prepare derivative works of the Software, and to permit third-parties to whom the Software is furnished to do so, all subject to the following:
The copyright notices in the Software and this entire statement, including the above license grant, this restriction and the following disclaimer, must be included in all copies of the Software, in whole or in part, and all derivative works of the Software, unless such copies or derivative works are solely in the form of machine-executable object code generated by a source language processor.
THE SOFTWARE IS PROVIDED “AS IS”, WITHOUT WARRANTY OF ANY KIND, EXPRESS OR IMPLIED, INCLUDING BUT NOT LIMITED TO THE WARRANTIES OF MERCHANTABILITY, FITNESS FOR A PARTICULAR PURPOSE, TITLE AND NON-INFRINGEMENT. IN NO EVENT SHALL THE COPYRIGHT HOLDERS OR ANYONE DISTRIBUTING THE SOFTWARE BE LIABLE FOR ANY DAMAGES OR OTHER LIABILITY, WHETHER IN CONTRACT, TORT OR OTHERWISE, ARISING FROM, OUT OF OR IN CONNECTION WITH THE SOFTWARE OR THE USE OR OTHER DEALINGS IN THE SOFTWARE.

Expat

Expat License. Copyright (c) 1998, 1999, 2000 Thai Open Source Software Center Ltd
Permission is hereby granted, free of charge, to any person obtaining a copy of this software and associated documentation files (the “Software”), to deal in the Software without restriction, including without limitation the rights to use, copy, modify, merge, publish, distribute, sublicense, and/or sell copies of the Software, and to permit persons to whom the Software is furnished to do so, subject to the following conditions:

The above copyright notice and this permission notice shall be included in all copies or substantial portions of the Software.
THE SOFTWARE IS PROVIDED "AS IS", WITHOUT WARRANTY OF ANY KIND, EXPRESS OR IMPLIED, INCLUDING BUT NOT LIMITED TO THE WARRANTIES OF MERCHANTABILITY, FITNESS FOR A PARTICULAR PURPOSE AND NONINFRINGEMENT. IN NO EVENT SHALL THE AUTHORS OR COPYRIGHT HOLDERS BE LIABLE FOR ANY CLAIM, DAMAGES OR OTHER LIABILITY, WHETHER IN AN ACTION OF CONTRACT, TORT OR OTHERWISE, ARISING FROM, OUT OF OR IN CONNECTION WITH THE SOFTWARE OR THE USE OR OTHER DEALINGS IN THE SOFTWARE.

FastDelegate

THE WORK (AS DEFINED BELOW) IS PROVIDED UNDER THE TERMS OF THIS CODE PROJECT OPEN LICENSE ("LICENSE"). THE WORK IS PROTECTED BY COPYRIGHT AND/OR OTHER APPLICABLE LAW. ANY USE OF THE WORK OTHER THAN AS AUTHORIZED UNDER THIS LICENSE OR COPYRIGHT LAW IS PROHIBITED.
BY EXERCISING ANY RIGHTS TO THE WORK PROVIDED HEREIN, YOU ACCEPT AND AGREE TO BE BOUND BY THE TERMS OF THIS LICENSE. THE AUTHOR GRANTS YOU THE RIGHTS CONTAINED HEREIN IN CONSIDERATION OF YOUR ACCEPTANCE OF SUCH TERMS AND CONDITIONS. IF YOU DO NOT AGREE TO ACCEPT AND BE BOUND BY THE TERMS OF THIS LICENSE, YOU CANNOT MAKE ANY USE OF THE WORK.

1 Definitions.
- a "Articles" means, collectively, all articles written by Author which describes how the Source Code and Executable Files for the Work may be used by a user.
- b "Author" means the individual or entity that offers the Work under the terms of this License.
- c "Derivative Work" means a work based upon the Work or upon the Work and other pre-existing works.
- d "Executable Files" refer to the executables, binary files, configuration and any required data files included in the Work.
- e "Publisher" means the provider of the website, magazine, CD-ROM, DVD or other medium from or by which the Work is obtained by You.
- f "Source Code" refers to the collection of source code and configuration files used to create the Executable Files.
- g "Standard Version" refers to such a Work if it has not been modified, or has been modified in accordance with the consent of the Author, such consent being in the full discretion of the Author.
- h "Work" refers to the collection of files distributed by the Publisher, including the Source Code, Executable Files, binaries, data files, documentation, whitepapers and the Articles.
- i "You" is you, an individual or entity wishing to use the Work and exercise your rights under this License.

2 Fair Use/Fair Use Rights. Nothing in this License is intended to reduce, limit, or restrict any rights arising from fair use, fair dealing, first sale or other limitations on the exclusive rights of the copyright owner under copyright law or other applicable laws.

3 License Grant. Subject to the terms and conditions of this License, the Author hereby grants You a worldwide, royalty-free, non-exclusive, perpetual (for the duration of the applicable copyright) license to exercise the rights in the Work as stated below:
- a You may use the standard version of the Source Code or Executable Files in Your own applications.
- b You may apply bug fixes, portability fixes and other modifications obtained from the Public Domain or from the Author. A Work modified in such a way shall still be considered the standard version and will be subject to this License.
- c You may otherwise modify Your copy of this Work (excluding the Articles) in any way to create a Derivative Work, provided that You insert a prominent notice in each changed file stating how, when and where You changed that file.
- d You may distribute the standard version of the Executable Files and Source Code or Derivative Work in aggregate with other (possibly commercial) programs as part of a larger (possibly commercial) software distribution.
- e The Articles discussing the Work published in any form by the author may not be distributed or republished without the Author's consent. The author retains copyright to any such Articles. You may use the Executable Files and Source Code pursuant to this License but you may not repost or republish or otherwise distribute or make available the Articles, without the prior written consent of the Author.

Any subroutines or modules supplied by You and linked into the Source Code or Executable Files this Work shall not be considered part of this Work and will not be subject to the terms of this License.

4 Patent License. Subject to the terms and conditions of this License, each Author hereby grants to You a perpetual, worldwide, non-exclusive, no-charge, royalty-free, irrevocable (except as stated in this section) patent license to make, have made, use, import, and otherwise transfer the Work.

5 Restrictions. The license granted in Section 3 above is expressly made subject to and limited by the following restrictions:
- a You agree not to remove any of the original copyright, patent, trademark, and attribution notices and associated disclaimers that may appear in the Source Code or Executable Files.
- b You agree not to advertise or in any way imply that this Work is a product of Your own.
- c The name of the Author may not be used to endorse or promote products derived from the Work without the prior written consent of the Author.
- d You agree not to sell, lease, or rent any part of the Work. This does not restrict you from including the Work or any part of the Work inside a larger software distribution that itself is being sold. The Work by itself, though, cannot be sold, leased or rented.
- e You may distribute the Executable Files and Source Code only under the terms of this License, and You must include a copy of, or the Uniform Resource Identifier for, this License with every copy of the Executable Files or Source Code You distribute and ensure that anyone receiving such Executable Files and Source Code agrees that the terms of this License apply to such Executable Files and/or Source Code. You may not offer or impose any terms on the Work that alter or restrict the terms of this License or the recipients' exercise of the rights granted hereunder. You may not sublicense the Work. You must keep intact all notices that refer to this License and to the disclaimer of warranties. You may not distribute the Executable Files or Source Code with any technological measures that control access or use of the Work in a manner inconsistent with the terms of this License.
- f You agree not to use the Work for illegal, immoral or improper purposes, or on pages containing illegal, immoral or improper material. The Work is subject to applicable export laws. You agree to comply with all such laws and regulations that may apply to the Work after Your receipt of the Work.

6 Representations, Warranties and Disclaimer. THIS WORK IS PROVIDED "AS IS", "WHERE IS" AND "AS AVAILABLE", WITHOUT ANY EXPRESS OR IMPLIED WARRANTIES OR CONDITIONS OR GUARANTEES. YOU, THE USER, ASSUME ALL RISK IN ITS USE, INCLUDING COPYRIGHT INFRINGEMENT, PATENT INFRINGEMENT, SUITABILITY, ETC. AUTHOR EXPRESSLY DISCLAIMS ALL EXPRESS, IMPLIED OR STATUTORY WARRANTIES OR CONDITIONS, INCLUDING WITHOUT LIMITATION, WARRANTIES OR CONDITIONS OF MERCHANTABILITY, MERCHANTABLE QUALITY OR FITNESS FOR A PARTICULAR PURPOSE, OR ANY WARRANTY OF TITLE OR NON-INFRINGEMENT, OR THAT THE WORK (OR ANY PORTION THEREOF) IS CORRECT, USEFUL, BUG-FREE OR FREE OF VIRUSES. YOU MUST PASS THIS DISCLAIMER ON WHENEVER YOU DISTRIBUTE THE WORK OR DERIVATIVE WORKS.

7 Indemnity. You agree to defend, indemnify and hold harmless the Author and the Publisher from and against any claims, suits, losses, damages, liabilities, costs, and expenses (including reasonable legal or attorneys' fees) resulting from or relating to any use of the Work by You.

8 Limitation on Liability. EXCEPT TO THE EXTENT REQUIRED BY APPLICABLE LAW, IN NO EVENT WILL THE AUTHOR OR THE PUBLISHER BE LIABLE TO YOU ON ANY LEGAL THEORY FOR ANY SPECIAL, INCIDENTAL, CONSEQUENTIAL, PUNITIVE OR EXEMPLARY DAMAGES ARISING OUT OF THIS LICENSE OR THE USE OF THE WORK OR OTHERWISE, EVEN IF THE AUTHOR OR THE PUBLISHER HAS BEEN ADVISED OF THE POSSIBILITY OF SUCH DAMAGES.

9 Termination.
- a This License and the rights granted hereunder will terminate automatically upon any breach by You of any term of this License. Individuals or entities who have received Derivative Works from You under this License, however, will not have their licenses terminated provided such individuals or entities remain in full compliance with those licenses. Sections 1, 2, 6, 7, 8, 9, 10 and 11 will survive any termination of this License.

b If You bring a copyright, trademark, patent or any other infringement claim against any contributor over infringements You claim are made by the Work, your License from such contributor to the Work ends automatically.
c Subject to the above terms and conditions, this License is perpetual (for the duration of the applicable copyright in the Work). Notwithstanding the above, the Author reserves the right to release the Work under different license terms or to stop distributing the Work at any time; provided, however that any such election will not serve to withdraw this License (or any other license that has been, or is required to be, granted under the terms of this License), and this License will continue in full force and effect unless terminated as stated above.

10 Publisher. The parties hereby confirm that the Publisher shall not, under any circumstances, be responsible for and shall not have any liability in respect of the subject matter of this License. The Publisher makes no warranty whatsoever in connection with the Work and shall not be liable to You or any party on any legal theory for any damages whatsoever, including without limitation any general, special, incidental or consequential damages arising in connection to this license. The Publisher reserves the right to cease making the Work available to You at any time without notice

11 Miscellaneous
a This License shall be governed by the laws of the location of the head office of the Author or if the Author is an individual, the laws of location of the principal place of residence of the Author.
b If any provision of this License is invalid or unenforceable under applicable law, it shall not affect the validity or enforceability of the remainder of the terms of this License, and without further action by the parties to this License, such provision shall be reformed to the minimum extent necessary to make such provision valid and enforceable.
c No term or provision of this License shall be deemed waived and no breach consented to unless such waiver or consent shall be in writing and signed by the party to be charged with such waiver or consent.
d This License constitutes the entire agreement between the parties with respect to the Work licensed herein. There are no understandings, agreements or representations with respect to the Work not specified herein. The Author shall not be bound by any additional provisions that may appear in any communication from You. This License may not be modified without the mutual written agreement of the Author and You

libogg

Copyright (c) 2002, Xiph.org Foundation
Redistribution and use in source and binary forms, with or without modification, are permitted provided that the following conditions are met:
- Redistributions of source code must retain the above copyright notice, this list of conditions and the following disclaimer.
- Redistributions in binary form must reproduce the above copyright notice, this list of conditions and the following disclaimer in the documentation and/or other materials provided with the distribution.
- Neither the name of the Xiph.org Foundation nor the names of its contributors may be used to endorse or promote products derived from this software without specific prior written permission.

THIS SOFTWARE IS PROVIDED BY THE COPYRIGHT HOLDERS AND CONTRIBUTORS “AS IS” AND ANY EXPRESS OR IMPLIED WARRANTIES, INCLUDING, BUT NOT LIMITED TO, THE IMPLIED WARRANTIES OF MERCHANTABILITY AND FITNESS FOR A PARTICULAR PURPOSE ARE DISCLAIMED. IN NO EVENT SHALL THE FOUNDATION OR CONTRIBUTORS BE LIABLE FOR ANY DIRECT, INDIRECT, INCIDENTAL, SPECIAL, EXEMPLARY, OR CONSEQUENTIAL DAMAGES (INCLUDING, BUT NOT LIMITED TO, PROCUREMENT OF SUBSTITUTE GOODS OR SERVICES; LOSS OF USE, DATA, OR PROFITS; OR BUSINESS INTERRUPTION) HOWEVER CAUSED AND ON ANY THEORY OF LIABILITY, WHETHER IN CONTRACT, STRICT LIABILITY, OR TORT (INCLUDING NEGLIGENCE OR OTHERWISE) ARISING IN ANY WAY OUT OF THE USE OF THIS SOFTWARE, EVEN IF ADVISED OF THE POSSIBILITY OF SUCH DAMAGE.

libvorbis

Copyright (c) 2002-2004 Xiph.org Foundation
Redistribution and use in source and binary forms, with or without modification, are permitted provided that the following conditions are met:
- Redistributions of source code must retain the above copyright notice, this list of conditions and the following disclaimer.
- Redistributions in binary form must reproduce the above copyright notice, this list of conditions and the following disclaimer in the documentation and/or other materials provided with the distribution.
- Neither the name of the Xiph.org Foundation nor the names of its contributors may be used to endorse or promote products derived from this software without specific prior written permission.

THIS SOFTWARE IS PROVIDED BY THE COPYRIGHT HOLDERS AND CONTRIBUTORS “AS IS” AND ANY EXPRESS OR IMPLIED WARRANTIES, INCLUDING, BUT NOT LIMITED TO, THE IMPLIED WARRANTIES OF MERCHANTABILITY AND FITNESS FOR A PARTICULAR PURPOSE ARE DISCLAIMED. IN NO EVENT SHALL THE FOUNDATION OR CONTRIBUTORS BE LIABLE FOR ANY DIRECT, INDIRECT, INCIDENTAL, SPECIAL, EXEMPLARY, OR CONSEQUENTIAL DAMAGES (INCLUDING, BUT NOT LIMITED TO, PROCUREMENT OF SUBSTITUTE GOODS OR SERVICES; LOSS OF USE, DATA, OR PROFITS; OR BUSINESS INTERRUPTION) HOWEVER CAUSED AND ON ANY THEORY OF LIABILITY, WHETHER IN CONTRACT, STRICT LIABILITY, OR TORT (INCLUDING NEGLIGENCE OR OTHERWISE) ARISING IN ANY WAY OUT OF THE USE OF THIS SOFTWARE, EVEN IF ADVISED OF THE POSSIBILITY OF SUCH DAMAGE.

Tremolo

Copyright (C) 2002-2009 Xiph.org Foundation Changes Copyright (C) 2009-2010 Robin Watts for Pinknoise Productions Ltd
Redistribution and use in source and binary forms, with or without modification, are permitted provided that the following conditions are met:
— Redistributions of source code must retain the above copyright notice, this list of conditions and the following disclaimer.
— Redistributions in binary form must reproduce the above copyright notice, this list of conditions and the following disclaimer in the documentation and/or other materials provided with the distribution.
— Neither the name of the Xiph.org Foundation nor the names of its contributors may be used to endorse or promote products derived from this software without specific prior written permission.

THIS SOFTWARE IS PROVIDED BY THE COPYRIGHT HOLDERS AND CONTRIBUTORS “AS IS” AND ANY EXPRESS OR IMPLIED WARRANTIES, INCLUDING, BUT NOT LIMITED TO, THE IMPLIED WARRANTIES OF MERCHANTABILITY AND FITNESS FOR A PARTICULAR PURPOSE ARE DISCLAIMED. IN NO EVENT SHALL THE FOUNDATION OR CONTRIBUTORS BE LIABLE FOR ANY DIRECT, INDIRECT, INCIDENTAL, SPECIAL, EXEMPLARY, OR CONSEQUENTIAL DAMAGES (INCLUDING, BUT NOT LIMITED TO, PROCUREMENT OF SUBSTITUTE GOODS OR SERVICES; LOSS OF USE, DATA, OR PROFITS; OR BUSINESS INTERRUPTION) HOWEVER CAUSED AND ON ANY THEORY OF LIABILITY, WHETHER IN CONTRACT, STRICT LIABILITY, OR TORT (INCLUDING NEGLIGENCE OR OTHERWISE) ARISING IN ANY WAY OUT OF THE USE OF THIS SOFTWARE, EVEN IF ADVISED OF THE POSSIBILITY OF SUCH DAMAGE.

Tremor

Copyright (c) 2002, Xiph.org Foundation
Redistribution and use in source and binary forms, with or without modification, are permitted provided that the following conditions are met:
— Redistributions of source code must retain the above copyright notice, this list of conditions and the following disclaimer.
— Redistributions in binary form must reproduce the above copyright notice, this list of conditions and the following disclaimer in the documentation and/or other materials provided with the distribution.

— Neither the name of the Xiph.org Foundation nor the names of its contributors may be used to endorse or promote products derived from this software without specific prior written permission.

THIS SOFTWARE IS PROVIDED BY THE COPYRIGHT HOLDERS AND CONTRIBUTORS "AS IS" AND ANY EXPRESS OR IMPLIED WARRANTIES, INCLUDING, BUT NOT LIMITED TO, THE IMPLIED WARRANTIES OF MERCHANTABILITY AND FITNESS FOR A PARTICULAR PURPOSE ARE DISCLAIMED. IN NO EVENT SHALL THE FOUNDATION OR CONTRIBUTORS BE LIABLE FOR ANY DIRECT, INDIRECT, INCIDENTAL, SPECIAL, EXEMPLARY, OR CONSEQUENTIAL DAMAGES (INCLUDING, BUT NOT LIMITED TO, PROCUREMENT OF SUBSTITUTE GOODS OR SERVICES; LOSS OF USE, DATA, OR PROFITS; OR BUSINESS INTERRUPTION) HOWEVER CAUSED AND ON ANY THEORY OF LIABILITY, WHETHER IN CONTRACT, STRICT LIABILITY, OR TORT (INCLUDING NEGLIGENCE OR OTHERWISE) ARISING IN ANY WAY OUT OF THE USE OF THIS SOFTWARE, EVEN IF ADVISED OF THE POSSIBILITY OF SUCH DAMAGE.

Mersenne Twister

Copyright (C) 1997 - 2002, Makoto Matsumoto and Takuji Nishimura,
All rights reserved.
Redistribution and use in source and binary forms, with or without modification, are permitted provided that the following conditions are met:

1 Redistributions of source code must retain the above copyright notice, this list of conditions and the following disclaimer.
2 Redistributions in binary form must reproduce the above copyright notice, this list of conditions and the following disclaimer in the documentation and/or other materials provided with the distribution.
3 The names of its contributors may not be used to endorse or promote products derived from this software without specific prior written permission.

THIS SOFTWARE IS PROVIDED BY THE COPYRIGHT HOLDERS AND CONTRIBUTORS "AS IS" AND ANY EXPRESS OR IMPLIED WARRANTIES, INCLUDING, BUT NOT LIMITED TO, THE IMPLIED WARRANTIES OF MERCHANTABILITY AND FITNESS FOR A PARTICULAR PURPOSE ARE DISCLAIMED. IN NO EVENT SHALL THE COPYRIGHT OWNER OR CONTRIBUTORS BE LIABLE FOR ANY DIRECT, INDIRECT, INCIDENTAL, SPECIAL, EXEMPLARY, OR CONSEQUENTIAL DAMAGES (INCLUDING, BUT NOT LIMITED TO, PROCUREMENT OF SUBSTITUTE GOODS OR SERVICES; LOSS OF USE, DATA, OR PROFITS; OR BUSINESS INTERRUPTION) HOWEVER CAUSED AND ON ANY THEORY OF LIABILITY, WHETHER IN CONTRACT, STRICT LIABILITY, OR TORT (INCLUDING NEGLIGENCE OR OTHERWISE) ARISING IN ANY WAY OUT OF THE USE OF THIS SOFTWARE, EVEN IF ADVISED OF THE POSSIBILITY OF SUCH DAMAGE.

zlib

Copyright (C) 1995-2004 Jean-loup Gailly and Mark Adler
This software is provided 'as-is', without any express or implied warranty. In no event will the authors be held liable for any damages arising from the use of this software.
Permission is granted to anyone to use this software for any purpose, including commercial applications, and to alter it and redistribute it freely, subject to the following restrictions:

1 The origin of this software must not be misrepresented; you must not claim that you wrote the original software. If you use this software in a product, an acknowledgment in the product documentation would be appreciated but is not required.
2 Altered source versions must be plainly marked as such, and must not be misrepresented as being the original software.
3 This notice may not be removed or altered from any source distribution.

Jean-loup Gailly jloup@gzip.org, Mark Adler madler@alumni.caltech.edu

cURL

COPYRIGHT AND PERMISSION NOTICE
Copyright (c) 1996 – 2011, Daniel Stenberg, <daniel@haxx.se>.
All rights reserved.
Permission to use, copy, modify, and distribute this software for any purpose with or without fee is hereby granted, provided that the above copyright notice and this permission notice appear in all copies.
THE SOFTWARE IS PROVIDED "AS IS", WITHOUT WARRANTY OF ANY KIND, EXPRESS OR IMPLIED, INCLUDING BUT NOT LIMITED TO THE WARRANTIES OF MERCHANTABILITY, FITNESS FOR A PARTICULAR PURPOSE AND NONINFRINGEMENT OF THIRD PARTY RIGHTS. IN NO EVENT SHALL THE AUTHORS OR COPYRIGHT HOLDERS BE LIABLE FOR ANY CLAIM, DAMAGES OR OTHER LIABILITY, WHETHER IN AN ACTION OF CONTRACT, TORT OR OTHERWISE, ARISING FROM, OUT OF OR IN CONNECTION WITH THE SOFTWARE OR THE USE OR OTHER DEALINGS IN THE SOFTWARE.
Except as contained in this notice, the name of a copyright holder shall not be used in advertising or otherwise to promote the sale, use or other dealings in this Software without prior written authorization of the copyright holder.

c-ares

Copyright 1998 by the Massachusetts Institute of Technology.
Permission to use, copy, modify, and distribute this software and its documentation for any purpose and without fee is hereby granted, provided that the above copyright notice appear in all copies and that both that copyright notice and this permission notice appear in supporting documentation, and that the name of M.I.T. not be used in advertising or publicity pertaining to distribution of the software without specific, written prior permission.
M.I.T. makes no representations about the suitability of this software for any purpose. It is provided "as is" without express or implied warranty.

Performance Audio Framework

Copyright (C) 2004-2014 Texas Instruments Incorporated - http://www.ti.com/
All rights reserved.
Redistribution and use in source and binary forms, with or without modification, are permitted provided that the following conditions are met:

- Redistributions of source code must retain the above copyright notice, this list of conditions and the following disclaimer.
- Redistributions in binary form must reproduce the above copyright notice, this list of conditions and the following disclaimer in the documentation and/or other materials provided with the distribution.
- Neither the name of Texas Instruments Incorporated nor the names of its contributors may be used to endorse or promote products derived from this software without specific prior written permission.

THIS SOFTWARE IS PROVIDED BY THE COPYRIGHT HOLDERS AND CONTRIBUTORS "AS IS" AND ANY EXPRESS OR IMPLIED WARRANTIES, INCLUDING, BUT NOT LIMITED TO, THE IMPLIED WARRANTIES OF MERCHANTABILITY AND FITNESS FOR A PARTICULAR PURPOSE ARE DISCLAIMED. IN NO EVENT SHALL THE COPYRIGHT OWNER OR CONTRIBUTORS BE LIABLE FOR ANY DIRECT, INDIRECT, INCIDENTAL, SPECIAL, EXEMPLARY, OR CONSEQUENTIAL DAMAGES (INCLUDING, BUT NOT LIMITED TO, PROCUREMENT OF SUBSTITUTE GOODS OR SERVICES; LOSS OF USE, DATA, OR PROFITS; OR BUSINESS INTERRUPTION) HOWEVER CAUSED AND ON ANY THEORY OF LIABILITY, WHETHER IN CONTRACT, STRICT LIABILITY, OR TORT (INCLUDING NEGLIGENCE OR OTHERWISE) ARISING IN ANY WAY OUT OF THE USE OF THIS SOFTWARE, EVEN IF ADVISED OF THE POSSIBILITY OF SUCH DAMAGE.

GladmanAES Open Source release for encryption/decryption

Copyright (c) 1998-2010, Brian Gladman, Worcester, UK. All rights reserved.
The redistribution and use of this software (with or without changes) is allowed without the payment of fees or royalties provided that:

- source code distributions include the above copyright notice, this list of conditions and the following disclaimer;
- binary distributions include the above copyright notice, this list of conditions and the following disclaimer in their documentation.

This software is provided 'as is' with no explicit or implied warranties in respect of its operation, including, but not limited to, correctness and fitness for purpose.

libpng

This copy of the libpng notices is provided for your convenience. In case of any discrepancy between this copy and the notices in the file png.h that is included in the libpng distribution, the latter shall prevail.
COPYRIGHT NOTICE, DISCLAIMER, and LICENSE:
If you modify libpng you may insert additional notices immediately following this sentence.
This code is released under the libpng license.
libpng versions 1.2.6, August 15, 2004, through 1.6.15, November 20, 2014, are Copyright (c) 2004, 2006-2014 Glenn Randers-Pehrson, and are distributed according to the same disclaimer and license as libpng-1.2.5 with the following individual added to the list of Contributing Authors

- Cosmin Truta

libpng versions 1.0.7, July 1, 2000, through 1.2.5 - October 3, 2002, are Copyright (c) 2000-2002 Glenn Randers-Pehrson, and are distributed according to the same disclaimer and license as libpng-1.0.6 with the following individuals added to the list of Contributing Authors

- Simon-Pierre Cadieux
- Eric S. Raymond
- Gilles Vollant

and with the following additions to the disclaimer:

- There is no warranty against interference with your enjoyment of the library or against infringement. There is no warranty that our efforts or the library will fulfill any of your particular purposes or needs. This library is provided with all faults, and the entire risk of satisfactory quality, performance, accuracy, and effort is with the user.

libpng versions 0.97, January 1998, through 1.0.6, March 20, 2000, are Copyright (c) 1998, 1999 Glenn Randers-Pehrson, and are distributed according to the same disclaimer and license as libpng-0.96, with the following individuals added to the list of Contributing Authors:

- Tom Lane
- Glenn Randers-Pehrson
- Willem van Schaik

libpng versions 0.89, June 1996, through 0.96, May 1997, are Copyright (c) 1996, 1997 Andreas Dilger
Distributed according to the same disclaimer and license as libpng-0.88, with the following individuals added to the list of Contributing Authors:

- John Bowler
- Kevin Bracey
- Sam Bushell
- Magnus Holmgren
- Greg Roelofs
- Tom Tanner

libpng versions 0.5, May 1995, through 0.88, January 1996, are Copyright (c) 1995, 1996 Guy Eric Schalnat, Group 42, Inc.
For the purposes of this copyright and license, “Contributing Authors” is defined as the following set of individuals:

- Andreas Dilger
- Dave Martindale
- Guy Eric Schalnat
- Paul Schmidt
- Tim Wegner

The PNG Reference Library is supplied “AS IS”. The Contributing Authors and Group 42, Inc. disclaim all warranties, expressed or implied, including, without limitation, the warranties of merchantability and of fitness for any purpose. The Contributing Authors and Group 42, Inc. assume no liability for direct, indirect, incidental, special, exemplary, or consequential damages, which may result from the use of the PNG Reference Library, even if advised of the possibility of such damage.
Permission is hereby granted to use, copy, modify, and distribute this source code, or portions hereof, for any purpose, without fee, subject to the following restrictions:
1 The origin of this source code must not be misrepresented.
2 Altered versions must be plainly marked as such and must not be misrepresented as being the original source.
3 This Copyright notice may not be removed or altered from any source or altered source distribution.
The Contributing Authors and Group 42, Inc. specifically permit, without fee, and encourage the use of this source code as a component to supporting the PNG file format in commercial products. If you use this source code in a product, acknowledgment is not required but would be appreciated.
A “png_get_copyright” function is available, for convenient use in “about” boxes and the like:

- printf(“%s”,png_get_copyright(NULL));

Also, the PNG logo (in PNG format, of course) is supplied in the files “pngbar.png” and “pngbar.jpg (88x31) and “pngnow.png” (98x31).
Libpng is OSI Certified Open Source Software. OSI Certified Open Source is a certification mark of the Open Source Initiative.
Glenn Randers-Pehrson
glennrp at users.sourceforge.net
20-Nov-14

Surround sound formats

Below is a brief description of the main surround sound formats you'll find on BDs, DVDs, satellite, cable and terrestrial broadcasts, and video cassettes.

Dolby

The Dolby technologies are explained below. See http://www.dolby.com for more detailed information.

Manufactured under license from Dolby Laboratories. Dolby, Dolby Atmos, Dolby Surround, and the double-D symbol are trademarks of Dolby Laboratories.

DTS

The DTS technologies are explained below. See http://www.dts.com for more detailed information.

For DTS patents, see http://patents.dts.com. Manufactured under license from DTS Licensing Limited. DTS, DTS-HD, the Symbol, & DTS and the Symbol together are registered trademarks, and DTS-HD Master Audio and DTS Neo:X | 11.1 are a trademark of DTS, Inc. © DTS, Inc. All Rights Reserved.

Auto Surround, ALC and Stream Direct with different input signal formats

The following charts show what you will hear with different input signal formats, depending on the Stream Direct mode (see Using Stream Direct on page 74) you have selected.

Stereo (2 channel) signal formats

Input signal format	Auto Surround / PURE DIRECT / DIRECT		ALC
	Rendering Mode : OBJECT	Rendering Mode : LEGACY	
Dolby: 2.0 Surround	**Dolby Surround**		**Dolby Digital**
Dolby Digital	**Dolby Surround**	**Dolby Digital**	**Dolby Digital**
Dolby Digital Plus	**Dolby Surround**	**Dolby Digital Plus**	**Dolby Digital Plus**
Dolby TrueHD	**Dolby Surround**	**Dolby TrueHD**	**Dolby TrueHD**
DTS Surround	**Neo:X CINEMA**		DTS
DTS	**Neo:X CINEMA**	DTS	DTS
DTS-HD	**Neo:X CINEMA**	DTS-HD	DTS-HD
Other stereo sources	Stereo playback		Stereo playback
Analog sources	*As above*/ANALOG DIRECT (stereo) <a>		*As above*
PCM sources	Stereo playback		*As above*
DVD-A sources	*As above*		*As above*
SACD sources	*As above*/DSD DIRECT (stereo) <b>		*As above*

a ANALOG DIRECT is available when the listening mode set to **PURE DIRECT**.
b DSD DIRECT is available when the listening mode set to **PURE DIRECT**.

Multichannel signal formats

Input signal format	Auto Surround / PURE DIRECT / DIRECT		ALC
	Rendering Mode : OBJECT	Rendering Mode : LEGACY	
Surround Back speaker(s): Connected			
Dolby: Surround EX	**Dolby Surround**		**Dolby Digital**
Dolby Digital	**Dolby Surround**	**Dolby Digital**	**Dolby Digital**
Dolby Digital Plus	**Dolby Surround**	**Dolby Digital Plus**	**Dolby Digital Plus**
Dolby TrueHD	**Dolby Surround**	**Dolby TrueHD**	**Dolby TrueHD**
DTS-ES (6.1 channel sources/6.1 channel flagged)	**DTS-ES** (Matrix/Discrete)		DTS
DTS-HD ES (6.1 channel flagged)	**DTS-ES** (Matrix)		DTS-HD
DTS	**Neo:X CINEMA**	DTS	DTS
DTS-HD	**Neo:X CINEMA**	DTS-HD	DTS-HD
Other 5.1/6.1/7.1 channel sources	Straight decoding		Straight decoding
Front height/Front wide speakers: Connected			
Dolby: Surround EX	**Dolby Surround**		**Dolby Digital**
Dolby Digital	**Dolby Surround**	**Dolby Digital**	**Dolby Digital**
Dolby Digital Plus	**Dolby Surround**	**Dolby Digital Plus**	**Dolby Digital Plus**
Dolby TrueHD	**Dolby Surround**	**Dolby TrueHD**	**Dolby TrueHD**
DTS-ES (6.1 channel sources/6.1 channel flagged)	**Neo:X CINEMA**	DTS	DTS
DTS-HD ES (6.1 channel flagged)	**Neo:X CINEMA**	DTS-HD	DTS-HD
DTS	**Neo:X CINEMA**	DTS	DTS
DTS-HD	**Neo:X CINEMA**	DTS-HD	DTS-HD
Other 5.1/6.1/7.1 channel sources	Straight decoding		Straight decoding
Top forward/Top middle/Top backward speakers: Connected			
Dolby: Surround EX	**Dolby Surround**		**Dolby Digital**
Dolby Digital	**Dolby Surround**	**Dolby Digital**	**Dolby Digital**
Dolby Digital Plus	**Dolby Surround**	**Dolby Digital Plus**	**Dolby Digital Plus**
Dolby TrueHD	**Dolby Surround**	**Dolby TrueHD**	**Dolby TrueHD**
Other 5.1/6.1/7.1 channel sources	Straight decoding		Straight decoding
Surround Back, Front height, Front wide, Top forward, Top middle and Top backward speakers: Not connected			
All 5.1/6.1/7.1 channel sources	Straight decoding		Straight decoding

Dolby Atmos format

Input signal format	Auto Surround / PURE DIRECT / DIRECT		ALC
	Rendering Mode : OBJECT	Rendering Mode : LEGACY	
When 6 or more speakers, excluding the subwoofers, are connected			
Dolby Atmos	**Dolby Atmos**	Channel decode	Channel decode
When 5 or fewer speakers, excluding the subwoofers, are connected			
Dolby Atmos	Channel decode	Channel decode	Channel decode

Speaker Setting Guide

In order to achieve an even better surround effect, it is important to accurately position the speakers and make their volume and tone characteristics uniform so as to finely focus the multi-channel sound.
The three major elements in positioning the speakers are **distance**, **angle** and **orientation** (the direction in which the speakers are pointing).
Distance: The distance of all the speakers should be equal.
Angle: The speakers should be horizontally symmetrical.
Orientation: The orientation should be horizontally symmetrical.
In most homes, however, it is not possible to achieve this environment. For the distance, on this receiver it is possible to automatically correct the speaker distance electrically to a precision of 1 cm (0.4 inch) using the Full Auto MCACC Setup function (page 59).

Step 1: Speaker layout and distance adjustment

Use speaker stands or the like to make sure the speakers are steady, and leave at least 10 cm (4 inches) from the surrounding walls. Position the speakers attentively so that the speakers on the left and right are at equal angles from the listening position (center of the adjustments). (We recommend using cords, etc., when adjusting the layout.) Ideally all the speakers should be equidistant from the listening position.

Note

If the speakers cannot be set at equal distances (on a circle), use the Auto MCACC Setup speaker distance correction and Fine Speaker Distance functions to make them equalize the distance artificially.

Step 2: Adjusting the speaker height

Adjust the heights (angles) of the different speakers.
Adjust so that the front speaker units reproducing mid- and high frequencies is roughly at the height of the ears.
If the center speaker cannot be set at the same height as the front speakers, adjust its angle of elevation to point it to the listening position.
Set surround speaker 1 so that it is not under the height of the ears.

Step 3: Adjusting the speaker orientation

If the left and right speakers are not pointing in the same direction, the tone will not be the same on the right and left, and as a result the sound field will not be reproduced properly. However, if all the speakers are pointed towards the listening position, the sound field will seem cramped. Testing by the Pioneer Multi-channel Research Group has shown that a good sense of sound positioning can be achieved by pointing all the speakers towards an area 30 cm (12 inches) to 80 cm (31 inches) behind the listening position (between the surround speakers and the listening position).
However, the sense of sound positioning can differ according to the conditions in the room and the speakers being used. In smaller environments in particular (when the front speakers are close to the listening position), with this method the speakers will be pointed too inward. We suggest you use this example of installation as reference when trying out different installation methods.

Step 4: Positioning and adjusting the subwoofer

Placing the subwoofer between the center and front speakers makes even music sources sound more natural (if there is only one subwoofer, it doesn't matter if it is placed on the left or right side). The low bass sound output from the subwoofer is not directional and there is no need to adjust the height. Normally the subwoofer is placed on the floor. Put it in a position at which it will not cancel out the bass sound output from the other speakers. Also note that placing it near a wall may result in sympathetic vibrations with the building that could excessively amplify the bass sound.
If the subwoofer must be installed near a wall, place it at an angle so that it is not parallel to the wall surface. This can help reduce any sympathetic vibrations, but depending on the shape of the room this could result in standing waves. However, even if standing waves are generated, their influence on the sound quality can be prevented using the Auto MCACC's standing wave control function (page 108).

Step 5: Default settings with the Auto MCACC Setup (auto sound field correction) function

It is more effective to perform the Full Auto MCACC Setup (page 59) procedure once the adjustments described above have been completed.

Note

The distance to the subwoofer may be slightly larger than the distance actually measured with a tape measure, etc. This is because this distance is corrected for electric delay, and is not a problem.

Positional relationship between speakers and monitor

Position of front speakers and monitor

The front speakers should be as equidistant as possible to the monitor.

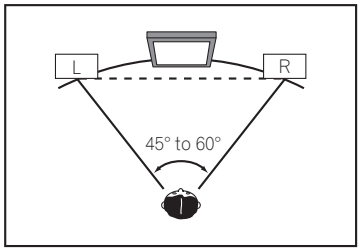

Position of center speaker and monitor

Since mostly dialogs are output from the center speaker, keeping the center speaker as close as possible to the screen makes the overall sound more natural. For TVs using Braun tubes, however, when installing the center speaker on the floor, adjust its angle of elevation to point it towards the listening position.

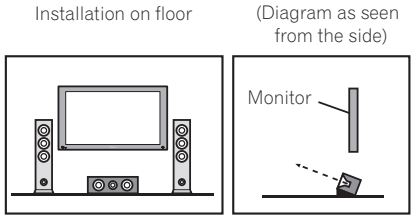

- If the center speaker is not of the shielded type, install it away from the TV.
- When installing the center speaker on top of the monitor, place it facing slightly downwards towards the listening position.

About messages displayed when using network functions

Refer to the following information when you come up with a status message while operating the Network functions.

Status messages	Descriptions
Connection Down	The selected category or Internet radio station cannot be accessed.
File Format Error	Cannot be played back for some reasons.
Track Not Found	The selected song has not been found anywhere on the network.
Server Error	The selected server cannot be accessed.
Server Disconnected	The server has been disconnected.
Empty	There are no files stored in the selected folder.
License Error	The license for the contents to be played back is invalid.
Item Already Exists	This is displayed when the file you have attempted to register in the Favorites folder has already been registered.
Favorite List Full	This is displayed when you have attempted to register a file in the Favorites folder but the Favorites folder is already full.

Important information regarding the HDMI connection

There are cases where you may not be able to route HDMI signals through this receiver (this depends on the HDMI-equipped component you are connecting-check with the manufacturer for HDMI compatibility information).
If you aren't receiving HDMI signals properly through this receiver (from your component), please try one of the following configurations when connecting up.

Configuration A

Use component video cables to connect the video output of your HDMI-equipped component to the receiver's component video input. The receiver can then convert the analog component video signal to a digital HDMI signal for transmission to the display. For this configuration, use the most convenient connection (digital is recommended) for sending audio to the receiver. See the operating instructions for more on audio connections.

Note

The picture quality will change slightly during conversion.

Configuration B

Connect your HDMI-equipped component directly to the display using an HDMI cable. Then use the most convenient connection (digital is recommended) for sending audio to the receiver. See the operating instructions for more on audio connections. Set the display volume to minimum when using this configuration.

Notes

- If your display only has one HDMI terminal, you can only receive HDMI video from the connected component.
- Depending on the component, audio output may be limited to the number of channels available from the connected display unit (for example audio output is reduced to 2 channels for a monitor with stereo audio limitations).
- If you want to switch the input function, you'll have to switch functions on both the receiver and your display unit.
- Since the sound is muted on the display when using the HDMI connection, you must adjust the volume on the display every time you switch input functions.

Cleaning the unit

- Use a polishing cloth or dry cloth to wipe off dust and dirt.
- When the surface is dirty, wipe with a soft cloth dipped in some neutral cleanser diluted five or six times with water, and wrung out well, and then wipe again with a dry cloth. Do not use furniture wax or cleansers.
- Never use thinners, benzene, insecticide sprays or other chemicals on or near this unit, since these will corrode the surface.

Glossary

Audio formats/Decoding

Dolby
The Dolby technologies are explained below. See http://www.dolby.com for more detailed information.

Dolby Digital
Dolby Digital is a multichannel digital audio coding system widely used in cinemas, and in the home for DVD and digital broadcast soundtracks.

Dolby TrueHD
Dolby TrueHD is the lossless encoding technology developed for high-definition optical discs in the upcoming era.

Dolby Digital Plus
Dolby Digital Plus is the audio technology for all high-definition programming and media. It combines the efficiency to meet future broadcast demands with the power and flexibility to realize the full audio potential expected in the upcoming high-definition era.

Dolby Atmos
Features
- Provides a powerful and dramatically new listening experience for cinema sound.
- Creates a 3 dimensional listening environment where sounds can be transported through the room.
- Reproduces a natural sound that matches the story exactly and sounds as if real.
- Addition of audio elements in the height space above the listener. Height audio is reproduced by either overhead or Dolby enabled speakers.
- The original intention of the producers can be expressed, no matter what kind of system setup you have in your home.

Technical information
- Placement for clearer, more accurate cinema sound is possible. With mixing that uses “objects”, independent sound elements can be superimposed on channel-based material.
- By importing all of the intentions of the director as meta data, it is possible to customize play back for every home.
- Soundtracks are scaled to achieve best performance through your specific speaker system.
- Dolby Atmos uses a multi layering approach for building soundtracks. In combination with the conventional channel-based method, the base layer is composed of mainly motionless environmental sounds. On top of this layer is the layer that realizes the sound elements that have “movement”. Here, sound can be placed and moved so that it is linked accurately with the images on-screen.
  In the meta data, it is indicated how this type of sound element will act when it is played back. This indication enables playback that reflects the intention of the director as much as possible, in any playback environment. This dual-layer approach not only allows moviemakers to freely make full use of a variety of expressions, but also enables users to experience the intentions of the producer in any type of home theater setup.
- Dolby Atmos contents are required to enjoy Dolby Atmos. For Blu-ray discs with Dolby Atmos, Dolby Atmos can be played by connecting most conventional Blu-ray discs with this receiver using HDMI.

DTS
The DTS technologies are explained below. See http://www.dts.com for more detailed information.

DTS Digital Surround
DTS Digital Surround is a 5.1-channel audio coding system from DTS Inc. now widely used for DVD-Video, DVD-Audio, 5.1 music discs, digital broadcasts, and video games.

DTS-HD Master Audio
DTS-HD Master Audio is a technology that delivers master audio sources recorded in a professional studio to listeners without any loss of data, preserving audio quality.

DTS-HD High Resolution Audio
A high definition audio technology by which signals can be transferred over HDMI cables.

DTS-ES
DTS-ES (the ES stands for Extended Surround) is a decoder that is capable of decoding both DTS-ES Discrete 6.1 and DTS-ES Matrix 6.1 encoded sources.

DTS Neo:X
DTS Neo:X can generate 11.1 channel surround sound from any matrixed stereo source (such as video or TV) and from 5.1 channel sources.

Decoding
A technology for converting digital signals that have been compressed upon recording by a digital signal processing circuit, etc., into the original signals. The term “decoding” (or “matrix decoding”) is also used for the technology which converts 2-channel sound sources into multiple channels or expands 5.1-channel signals into 6.1 or 7.1 channels.

Calibrating the sound field/Improving the sound quality

Phase Control
The Phase Control technology incorporated into this receiver’s design provides coherent sound reproduction through the use of phase matching for an optimal sound image at your listening position.

Phase Control Plus (Auto Phase Control Plus)
Corrects the delay in the contents’ low frequency effects (LFE). When properly corrected, the bass sound is more powerful, improving the balance of the sound.
When **AUTO** is selected, the contents are analyzed in real time, allowing them to be played in optimal conditions. This is effective for contents with low frequency effects (LFE), such as Dolby Digital 5.1-channel contents.

Full Band Phase Control
The Full Band Phase Control feature calibrates the frequency-phase characteristics of the speakers connected.

Virtual Speakers
Virtual playback of a maximum of 11.2 channels combining the actually installed speakers and the virtual speakers is possible. This makes for smoother connection between the sounds and an improved 3D feel.

Virtual Surround Back
When you’re not using surround back speakers, selecting this mode allows you to hear a virtual surround back channel through your surround speakers. You can choose to listen to sources with no surround back channel information.

Virtual Height
Settings to create virtual front height channel audio.

Virtual Wide
When you’re not using front wide speakers, selecting this mode allows you to hear a virtual front wide channel through your front speakers.

Auto Sound Retriever
The Auto Sound Retriever feature employs DSP technology to restore sound pressure and smooth jagged artifacts left over after compression.
With some audio inputs, the Sound Retriever effect is automatically optimized based on the bitrate information of the contents that have been input to achieve high sound quality.

Sound Retriever Air
Sound Retriever Air compensates for reduced sound quality due to compression when sending *Bluetooth* signals.

PQLS
Jitterless high quality playback is possible by connecting a PQLS-compatible player with HDMI connections.

ALC (Auto Level Control)
In the Auto level control (**ALC**) mode, this receiver equalizes playback sound levels.
Also, the low and high frequency sounds, dialogs, surround effects, etc., that are difficult to hear when the volume is low are adjusted to be optimal for the volume level. This mode is particularly optimum when listening at night.

Front Stage Surround Advance
With the Front Stage Surround Advance feature, you can enjoy seamless, natural surround sound effects using only the front speakers, without deteriorating the quality of the original sound.

MCACC
The Auto MCACC Setup provides a quick but accurate surround sound setup, which includes the advanced features of Professional Acoustic Calibration EQ.

HDMI

Control with HDMI function
Synchronized operations below with a **Control** with HDMI-compatible Pioneer TV or Blu-ray Disc player are possible when the component is connected to the receiver using an HDMI cable.
- The receiver's volume can be set and the sound can be muted using the TV's remote control.
- The receiver's input switches over automatically when the TV's input is changed or a **Control** with HDMI-compatible component is played.
- The receiver's power is also set to standby, when the TV's power is set to standby.

ARC (Audio Return Channel)
When a TV supporting the HDMI ARC (Audio Return Channel) function is connected to the receiver, the sound of the TV can be input via the **HDMI OUT** terminal.
The sound of the TV can be input from the receiver's **HDMI OUT** terminal, so connection with the TV can be completed with a single HDMI cable.

Network function

AirPlay
AirPlay works with iPhone, iPad, and iPod touch with iOS 4.3.3 or later, Mac with OS X Mountain Lion or later, and PC with iTunes 10.2.2 or later.
For more information, see the Apple website (http://www.apple.com).

DLNA
The Digital Living Network Alliance (DLNA) is a cross-industry organization of consumer electronics, computing industry and mobile device companies. Digital Living provides consumers with easy sharing of digital media through a wired or wireless network in the home.

vTuner
vTuner is a paid online database service that allows you to listen to radio and TV broadcasts on the Internet. vTuner lists thousands of stations from over 100 different countries around the globe. For more detail about vTuner, visit the following website:
http://www.radio-pioneer.com
"This product is protected by certain intellectual property rights of NEMS and BridgeCo. Use or distribution of such technology outside of this product is prohibited without a license from NEMS and BridgeCo or an authorized subsidiary."

Apple Lossless (ALAC)
"ALAC" stands for Apple Lossless Audio Codec. This is a loseless type audio codec and is used for example for iTunes®. It compresses non-compressed files (such as WAV and AIFF) to about one half the original size with no loss of sound quality.

FLAC
FLAC (Free Lossless Audio Codec) is an audio format allows lossless codec. Audio is compressed in FLAC without any loss in quality. For more details about FLAC, visit the following website:
http://flac.sourceforge.net/

Windows Media
Windows Media is a multimedia framework for media creation and distribution for Microsoft Windows. Windows Media is either a registered trademark or trademark of Microsoft Corporation in the U.S. and/or other countries. Use an application licensed by Microsoft Corporation to author, distribute, or play Windows Media formatted content. Using an application unauthorized by Microsoft Corporation is subject to malfunction.

Windows Media Player 11/Windows Media Player 12
Windows Media Player is software to deliver music, photos and movies from a Microsoft Windows computer to home stereo systems and TVs.
With this software, you can play back files stored on the PC through various devices wherever you like in your home.
This software can be downloaded from Microsoft's website.
- Windows Media Player 11 (for Windows Vista)
- Windows Media Player 12 (for Windows 7 or Windows 8)

For more information check the official Microsoft website.

Router
A device for relaying data flowing on a network to another network. In homes, routers often also function as DHCP servers. Products with built-in wireless LAN access points are called "wireless LAN routers".

DHCP
Abbreviation of Dynamic Host Configuration Protocol. A protocol for automatically assigning such setting information as IP addresses within network connections. This offers convenience in that, when enabled, it allows network functions to be used simply by connecting the devices to the network.

Wireless LAN/Wi-Fi
"Wi-Fi" (Wireless Fidelity) is a trademark coined by the Wi-Fi Alliance trade association to increase recognition of wireless LAN standards. With the increase in the number of devices connected to computers in recent years, Wi-Fi offers the advantage of eliminating the complexity of making connections with LAN cables by using wireless connection. As a way of reassuring users, products that have passed interoperability tests carry the logo "Wi-Fi Certified" to indicate that compatibility is assured.

WPS
Abbreviation of Wi-Fi Protected Setup. A standard established by the Wi-Fi Alliance industry group for a function allowing settings related to interconnection of WPS-compatible wireless LAN devices and encryption to be made with simple operations. There are a number of methods, including push-button configuration and PIN code configuration. This AV receiver supports both push-button configuration and PIN code configuration.

SSID
Abbreviation of Service Set IDentifier. A wireless LAN access point identifier. Can be set as desired using up to 32 characters of English letters and numbers.

Bluetooth function

Bluetooth wireless technology

A short-range wireless communications standard for digital devices. Information is exchanged between devices several meters to several tens of meters apart using radio waves. It uses radio waves on the 2.4 GHz band which does not require applications for licenses or usage registration for applications conducting wireless exchange of digital information at relatively low speeds, such as computer mouses and keyboards, mobile phones, smart-phones, text and audio information for PDAs, etc.

Receiver function

MHL

MHL (Mobile High-definition Link) is an interface standard for transmitting digital signals with mobile devices. MHL can carry high quality multi-channel audio data and 3D/Full-HD video formats.
"This receiver incorporates MHL 2."

USB-DAC

By using a USB cable (Type A Male to Type B Male, sold separately) to connect this unit's **USB-DAC IN** terminal to the USB port on a PC, this unit can be used as a D/A converter.

Features index

AVNavigator
See How to use the built-in AVNavigator on page 51.

ECO MODE 1, 2
See Using the Advanced surround effects on page 74.

HDZONE
See Making MULTI-ZONE connections on page 44.

HTC Connect
See About HTC Connect on page 79.

Pandora
See Listening to Pandora Internet Radio on page 80.

Play ZONE
See Play ZONE Setup on page 59.

4K pass through/up scaling
See About HDMI on page 37.

Full Auto MCACC
See Automatically conducting optimum sound tuning (Full Auto MCACC) on page 59.

Automatic MCACC (Expert)
See Automatic MCACC (Expert) on page 105.

Manual MCACC setup
See Manual MCACC setup on page 107.

PQLS
See Setting the PQLS function on page 87.

Phase Control
See Better sound using Phase Control on page 75.

Full Band Phase Control
See Better sound using Phase Control and Full Band Phase Control on page 76.

Standing Wave
See Setting the Audio options on page 89.

Phase Control Plus
See Setting the Audio options on page 89.

Auto Sound Retriever
See Setting the Audio options on page 89.

ALC (Auto Level Control)
See Auto playback on page 73.

Front Stage Surround Advance
See Enjoying various types of playback using the listening modes on page 73.

Sound Retriever Air
See Enjoying various types of playback using the listening modes on page 73.

Dialog Enhancement
See Setting the Audio options on page 89.

Internet radio
See Listening to Internet radio stations on page 79.

vTuner
See Listening to Internet radio stations on page 79.

DLNA
See About network playback on page 81.

AirPlay
See Using AirPlay on iPod touch, iPhone, iPad, and iTunes on page 78.

Wireless LAN
See Connecting to the network through LAN interface on page 47.

Playback High Resolution audio file
See About playable file formats on page 83.
See Playing a USB device on page 66.

Slideshow
See Playing back photo files stored on a USB memory device on page 66.

Bluetooth
See Music playback using Bluetooth wireless technology on page 69.

ARC (Audio Return Channel)
See HDMI Setup on page 85.

Auto delay
See Setting the Audio options on page 89.

Virtual Surround Back
See Setting the Audio options on page 89.

Virtual Height
See Setting the Audio options on page 89.

Virtual Wide
See Setting the Audio options on page 89.

Digital Video Converter
See Setting the Video options on page 91.

Pure Cinema
See Setting the Video options on page 91.

Progressive Motion
See Setting the Video options on page 91.

Advanced Video Adjust
See Setting the Video options on page 91.

Auto Power Down
See The Other Setup menu on page 116.

USB-DAC
See Playing music from a computer on page 68.

Specifications

Amplifier section

Continuous average power output*
- 8 Ω ..... 140 W** per channel
- 6 Ω ..... 200 W (SC-99)*** / 190 W (SC-97)*** per channel

** Measured pursuant to the Federal Trade Commission's Trade Regulation rule on Power Output Claims for Amplifiers*
*** 1 kHz with no more than 0.08 %**** total harmonic distortion*
**** 1 kHz with no more than 1 %**** total harmonic distortion*
***** Measured by Audio Spectrum Analyzer*

Multi channel simultaneous power output (1 kHz, 1 %, 8 Ω)
- 9 ch total ..... 850 W (SC-99)/810 W (SC-97)

Continuous Power Output (1 kHz, 8 Ω, 0.08 %)
- Front ..... 140 W + 140 W
- Center ..... 140 W
- Surround ..... 140 W + 140 W
- Surround back ..... 140 W + 140 W
- Top middle/Extra 1 ..... 140 W + 140 W

Continuous Power Output (1 kHz, 6 Ω, 1.0 %)
- Front ..... 200 W + 200 W (SC-99)/190 W + 190 W (SC-97)
- Center ..... 200 W (SC-99)/190 W (SC-97)
- Surround ..... 200 W + 200 W (SC-99)/190 W + 190 W (SC-97)
- Surround back ..... 200 W + 200 W (SC-99)/190 W + 190 W (SC-97)
- Top middle/Extra 1 ..... 200 W + 200 W (SC-99)/190 W + 190 W (SC-97)

Continuous Power Output (1 kHz, 4 Ω, 1.0 %)
- Front ..... 255 W + 255 W (SC-99)/240 W + 240 W (SC-97)
- Center ..... 255 W (SC-99)/240 W (SC-97)
- Surround ..... 255 W + 255 W (SC-99)/240 W + 240 W (SC-97)
- Surround back ..... 255 W + 255 W (SC-99)/240 W + 240 W (SC-97)
- Top middle/Extra 1 ..... 255 W + 255 W (SC-99)/240 W + 240 W (SC-97)

Total harmonic distortion ..... 0.04 % (1 kHz, 130 W + 130 W, 8 Ω)
Guaranteed speaker impedance ..... 4 Ω to 16 Ω

Audio Section

Input (Sensitivity/Impedance)
- PHONO MM ..... 5 mV/47 kΩ
- LINE ..... 400 mV/47 kΩ

Output (Level/Impedance)
- REC ..... 400 mV/2.2 kΩ

Signal-to-Noise Ratio (IHF, short circuited, A network)
- LINE ..... 103 dB

Tuner Section

Frequency Range (FM) ..... 87.5 MHz to 108 MHz
Antenna Input (FM) ..... 75 Ω unbalanced
Frequency Range (AM) ..... 530 kHz to 1 700 kHz
Antenna (AM) ..... Loop antenna (balanced)

Video Section

Signal level
- Composite Video ..... 1 Vp-p (75 Ω)
- Component Video ..... Y: 1.0 Vp-p (75 Ω), PB/PR: 0.7 Vp-p (75 Ω)

Corresponding maximum resolution
- Component Video 1080i (1125i)

Bluetooth Section

Version ..... *Bluetooth* Specification Ver. 2.1 + EDR
Output ..... *Bluetooth* Specification Class 2
Estimated line-of-sight transmission distance* ..... About 10 m
*The line-of-sight transmission distance is an estimate. Actual transmission distances supported may differ depending on surrounding conditions.
Frequency range ..... 2.4 GHz
Supported *Bluetooth* profiles ..... A2DP, AVRCP
Supported Codec ..... SBC (Subband Codec), AAC

Digital In/Out Section

HDMI terminal ..... 19-pin (Not DVI)
HDMI output type ..... 5 V, 55 mA
HDMI input/MHL terminal ..... 5 V, 900 mA
USB terminal ..... USB2.0 High Speed (Type A) 5 V, 1 A
USB terminal (SC-99 only) ..... USB2.0 High Speed (Type B)
iPod terminal ..... USB

Integrated Control Section

Control (IR) terminal ..... ø 3.5 Mini-jack (MONO)
IR signal ..... High Active (High Level: 2.0 V)
12 V Trigger terminal ..... ø 3.5 Mini-jack (MONO)
12 V Trigger output type ..... 12 V, Total 150 mA
RS-232C cable type ..... 9-pin, cross type, female-female

Network Section (Wired)

LAN terminal ..... 10 BASE-T/100 BASE-TX

Network Section (Wireless)

WLAN standards ..... IEEE 802.11a, IEEE 802.11b, IEEE 802.11g, IEEE 802.11n
Frequency band
- 2.4 GHz band (2.412 GHz to 2.462 GHz) ..... Channel 1 to Channel 11
- 5 GHz band (5.180 GHz to 5.240 GHz, 5.745 GHz to 5.825 GHz) ..... Channel 36 to Channel 48, Channel 149 to Channel 165

Security ..... Disabled (no encryption)
WEP (Key length: 64 bit/128 bit, Key format: ASCII/Hex)
WPA2 Mixed (WPA/WPA2, Encryption method: TKIP/AES, Recognition method: PSK)

Miscellaneous

Power requirements ..... AC 120 V, 60 Hz
Power consumption ..... 370 W
- In standby ..... 0.1 W
- In standby (HDMI control on) ..... 0.3 W
- In standby (Network standby on) ..... 2.7 W
- In standby (Network standby on, wireless LAN connected) ..... 3.0 W
- In standby (HDMI control on, Network standby on) ..... 2.7 W
- In standby (HDMI control on, Network standby on, wireless LAN connected) ..... 3.0 W

Auto power down ..... 15 min, 30 min, 60 min, off (default)
Dimensions ..... 435 mm (W) x 185 mm (H) x 441 mm (D)
(17.13 in. (W) x 7.28 in. (H) x 17.36 in. (D))
Weight (without package)
- SC-99 ..... 17.6 kg (38.8 lb)
- SC-97 ..... 17.5 kg (38.6 lb)

Number of Furnished Parts

MCACC Setup microphone 1
Remote control unit 1
AAA size IEC R03 dry cell batteries 2
AM loop antenna 1
FM wire antenna 1
Power cord
CD-ROM
Quick start guide
Safety Brochure
Warranty sheet

Notes

- Specifications and the design are subject to possible modifications without notice, due to improvements.
- *This product includes FontAvenue® fonts licensed by NEC Corporation. FontAvenue is a registered trademark of NEC Corporation.*
- *iOS is a trademark on which Cisco holds the trademark right in the US and certain other countries.*
- *Microsoft, Windows, Windows Media and Windows Vista are either registered trademarks or trademarks of Microsoft Corporation in the United States and/or other countries.*
- *Android and Google Play are trademarks of Google Inc.*
- Corporation and product names mentioned herein are trademarks or registered trademarks of the respective corporations.

Preset code list

You should have no problem controlling a component if you find the manufacturer in this list, but please note that there are cases where codes for the manufacturer in the list will not work for the model that you are using. There are also cases where only certain functions may be controllable after assigning the proper preset code.

Important

- We do not guarantee the operations of all the manufacturers and devices listed. Operation may not be possible even if a preset code is entered.
  If you can't find a preset code that matches the component you want to control, you can still teach the remote individual commands from another remote control (see Programming signals from other remote controls on page 100).

TV

Pioneer 0004, 0006, 0113, 0233, 0252, 0275, 0291, 0305
Admiral 0001, 0014
Adventura 0012
Aiwa 0002
Akai 0002, 0100
Albatron 0097
Alleron 0009
America Action 0104
Amtron 0008
Anam 0104
Anam National 0003, 0008
AOC 0004, 0005, 0006, 0100
Apex 0021, 0102, 0106
Audiovox 0008, 0104
Aventura 0103
Axion 0094
Bang & Olufsen 0111
Belcor 0004
Bell & Howell 0001
Benq 0064
Bradford 0008, 0104
Brillian 0109
Brockwood 0004
Broksonic 0104
Candle 0004, 0006, 0012, 0100
Carnivale 0100
Carver 0101
CCE 0110
Celebrity 0002
Celera 0106
Changhong 0106
Citizen 0004, 0006, 0008, 0100
Clarion 0104
Coby 0056
Colortyme 0004, 0006
Concerto 0004, 0006
Contec 0104
Contec/Cony 0007, 0008
Craig 0008, 0104
Crosley 0081, 0101
Crown 0008, 0104
CTX 0063
Curtis Mathes 0000, 0004, 0006, 0014, 0100, 0101
CXC 0008, 0104
Cytron 0093
Daewoo 0004, 0005, 0006, 0023
Daytron 0004, 0006
Dell 0073
DiamondVision 0096
Dimensia 0000
Disney 0046
Dumont 0004, 0011, 0099
Durabrand 0041, 0103, 0104
Dwin 0014
Electroband 0002
Electrograph 0107
Electrohome 0002, 0003, 0004, 0006
Element 0082
Emerson 0004, 0006, 0007, 0008, 0009, 0023, 0103, 0104
Emprex 0092
Envision 0004, 0006, 0100
Epson 0061
ESA 0103
Fujitsu 0009
Funai 0008, 0009, 0103, 0104
Futuretech 0008, 0104
Gateway 0067, 0107, 0108
GE 0000, 0003, 0004, 0006, 0010, 0016, 0039
GFM 0080, 0084
Gibralter 0004, 0011, 0099, 0100
Goldstar 0004, 0005, 0006, 0007, 0100
Gradiente 0066
Grunpy 0008, 0009, 0104
Haier 0112
Hallmark 0004, 0006
Harman/Kardon 0101
Harvard 0008, 0104
Havermy 0014
Hewlett Packard 0053
Hisense 0069
Hitachi 0004, 0006, 0007
Hyundai 0098
Ilo 0089, 0091
IMA 0008
Infinity 0101
InFocus 0074
Initial 0091
Insignia 0085, 0086
Inteq 0099
Janeil 0012
JBL 0101
JC Penney 0000, 0004, 0005, 0006, 0010
JCB 0002
Jensen 0004, 0006
JVC 0007, 0010, 0044
Kawasho 0002, 0004, 0006
KEC 0104
Kenwood 0004, 0006, 0100
KLH 0106
Kloss Novabeam 0008, 0012
KTV 0008, 0100, 0104, 0110
LG 0005, 0052, 0078, 0097
Logik 0001
Luxman 0004, 0006
LXI 0000, 0006, 0101, 0102
Magnavox 0004, 0006, 0019, 0020, 0037, 0042, 0100, 0101
Majestic 0001
Marantz 0004, 0006, 0062, 0100, 0101
Maxent 0087, 0107
Megapower 0097
Megatron 0006
Memorex 0001, 0005, 0006, 0041
MGA 0004, 0005, 0006, 0100
Midland 0010, 0011, 0099
Mintek 0091
Mitsubishi 0004, 0005, 0006, 0014, 0045
Monivision 0097
Montgomery Ward 0001
Motorola 0003, 0014
MTC 0004, 0005, 0006, 0100
Multitech 0008, 0104, 0110
NAD 0006, 0102
NEC 0003, 0004, 0005, 0006, 0100
Net-TV 0107
Nikko 0006, 0100
Norcent 0060
Olevia 0048, 0054, 0059
Onwa 0008, 0104
Oppo 0095
Optimus 0105
Optoma 0075
Optonica 0014
Orion 0025
Panasonic 0003, 0010, 0017, 0027, 0105, 0114
Penney 0100, 0102
Philco 0003, 0004, 0005, 0006, 0007, 0100, 0101
Philips 0003, 0004, 0007, 0019, 0020, 0101
Philips Magnavox 0019
Pilot 0004, 0100
Polaroid 0057, 0106
Portland 0004, 0005, 0006
Prima 0065
Princeton 0097
Prism 0010
Proscan 0000
Proton 0004, 0006, 0007
Protron 0055
Proview 0068
Pulsar 0004, 0011, 0099
Quasar 0003, 0010, 0105
Radio Shack 0100, 0104
Radio Shack/Realistic 0000, 0004, 0006, 0007, 0008
RCA 0000, 0003, 0004, 0005, 0006, 0013, 0024, 0035
Realistic 0100, 0104
Runco 0011, 0099, 0100
Sampo 0004, 0006, 0100, 0107
Samsung 0004, 0005, 0006, 0007, 0022, 0032, 0076, 0077, 0083, 0100, 0110
Sansui 0025
Sanyo 0004, 0050
Sceptre 0072
Scotch 0006
Scott 0004, 0006, 0007, 0008, 0009, 0090, 0104
Sears 0000, 0004, 0006, 0009, 0101, 0102, 0103
Sharp 0004, 0006, 0007, 0014, 0033
Sheng Chia 0014
Shogun 0004
Signature 0001
Skyworth 0307
Sony 0002, 0018, 0029, 0030, 0031, 0034
Soundesign 0004, 0006, 0008, 0009, 0104
Squareview 0103
SSS 0004, 0008, 0104
Starlite 0008, 0104
Superscan 0014
Supre-Macy 0012
Supreme 0002
SVA 0088
Sylvania 0004, 0006, 0049, 0079, 0080, 0100, 0101, 0103
Symphonic 0008, 0041, 0103, 0104
Syntax 0054
Syntax-Brillian 0054
Tandy 0014
Tatung 0003, 0108
TCL 0308
Technics 0010, 0105
Techwood 0004, 0006, 0010
Teknika 0001, 0004, 0005, 0006, 0007, 0008, 0009, 0101, 0104
TMK 0004, 0006
TNCi 0099
Toshiba 0026, 0028, 0036, 0038, 0040, 0043, 0102
Vector Research 0100
Vidikron 0101
Vidtech 0004, 0005, 0006
Viewsonic 0058, 0107
Viking 0012
Viore 0089
Vizio 0004, 0070, 0071, 0108
Wards 0000, 0001, 0004, 0005, 0006, 0009, 0100, 0101
Waycon 0102
Westinghouse 0047, 0051
White Westinghouse 0023
Yamaha 0004, 0005, 0006, 0100
Zenith 0001, 0004, 0011, 0015, 0099

DVD

If operations are not possible using the preset codes below, you may be able to conduct operations with the preset codes for the **BD**, **DVR (BDR, HDR)**.

Pioneer 2014, 2197, 2256
Accurian 2092
Advent 2072
Aiwa 2012
Akai 2066
Alco 2070
Allegro 2087
Amphion MediaWorks 2037
AMW 2037
Apex 2002, 2018, 2079, 2080
Apple 2058
Arrgo 2088
Aspire 2073
Astar 2052
Audiovox 2070
Axion 2040
Bang & Olufsen 2081
Blaupunkt 2080
Blue Parade 2078
Boston 2059
Broksonic 2066
California Audio Labs 2068
CambridgeSoundWorks 2065
CineVision 2087
Coby 2029
Curtis Mathes 2089
CyberHome 2000, 2088
Cytron 2039
Daewoo 2021, 2087
Denon 2026, 2068
Desay 2055
DiamondVision 2042
Disney 2022
Durabrand 2090
Emerson 2067, 2082, 2091
Enterprise 2082
ESA 2053, 2091
Fisher 2083
Funai 2091
GE 2016, 2077, 2080
GFM 2043
Go Video 2087
Gradiente 2068
Greenhill 2080
Haier 2094
Harman/Kardon 2030, 2084
Hitachi 2011
Hiteker 2079
iLive 2062
Ilo 2038
Initial 2038, 2080
Insignia 2036, 2064, 2091
Integra 2078
iSymphony 2060
JBL 2084
JVC 2013
Kawasaki 2070
Kenwood 2028, 2068
KLH 2070, 2080
Koss 2024, 2069, 2075
Landel 2093
Lasonic 2085
Lenoxx 2074, 2090
LG 2019, 2051, 2061, 2082, 2087
Liquid Video 2075
Liteon 2025, 2092
Magnavox 2067, 2076, 2091
Memorex 2066
Microsoft 2077
Mintek 2038, 2080, 2086
Mitsubishi 2020
Nesa 2080
Next Base 2093
Nexxtech 2056
Onkyo 2076
Oppo 2041, 2057
Oritron 2069, 2075
Panasonic 2005, 2007, 2017, 2032, 2033, 2050, 2068, 2076
Philips 2045, 2076
Proceed 2079
Proscan 2077
Qwestar 2069
RCA 2008, 2016, 2070, 2077, 2078, 2080
Regent 2074
Rio 2087
Rowa 2071
Samsung 2009, 2011, 2015, 2031, 2044, 2068
Sansui 2066
Sanyo 2066, 2083
Sharp 2035
Sherwood 2063
Shinsonic 2086
Sonic Blue 2087
Sony 2003, 2004, 2010, 2012, 2027, 2046, 2047, 2048
Sungale 2054
Superscan 2067
Sylvania 2023, 2067, 2091
Symphonic 2023
Teac 2070
Technics 2068
Theta Digital 2078
Toshiba 2001, 2006, 2049, 2066, 2076
Trutech 2000
Urban Concepts 2076
US Logic 2086
Venturer 2070
Xbox 2077
Yamaha 2005, 2068
Zenith 2019, 2076, 2082, 2087

BD

If operations are not possible using the preset codes below, you may be able to conduct operations with the preset codes for the **DVD**, **DVR (BDR, HDR)**.

Pioneer 2034, 2192, 2255, 2258, 2259, 2260, 2281
Denon 2310, 2311, 2312
Hitachi 2307, 2308, 2309
JVC 2290, 2291, 2293, 2294, 2295, 2296
LG 2286, 2287
Marantz 2302, 2303
Mitsubishi 2300, 2301
Onkyo 2289
Panasonic 2277, 2278, 2279
Philips 2280
Samsung 2282
Sharp 2304, 2305, 2306
Sony 2283, 2284, 2285, 2292
Toshiba 2288, 2262
Yamaha 2297, 2298, 2299

DVR (BDR, HDR)

If operations are not possible using the preset codes below, you may be able to conduct operations with the preset codes for the **DVD**, **BD**.

Pioneer 2078, 2099, 2107, 2109, 2144, 2193, 2194, 2195, 2196, 2257, 2258, 2259, 2260, 2261, 2264, 2265, 2266, 2270
Panasonic 2263, 2269
Sharp 2267, 2275
Sony 2268, 2271, 2272, 2273, 2276
Toshiba 2274

VCR

Pioneer 1035, 1108
ABS 1017
Adventura 1005
Aiwa 1005
Alienware 1017
American High 1004
Asha 1002
Audio Dynamics 1000
Audiovox 1003
Bang & Olufsen 1032
Beaumark 1002
Bell & Howell 1001
Calix 1003
Candle 1002, 1003
Canon 1004
Citizen 1002, 1003
Colortyme 1000
Craig 1002, 1003
Curtis Mathes 1000, 1002, 1004
Cybernex 1002
CyberPower 1017
Daewoo 1005
DBX 1000
Dell 1017
DIRECTV 1016, 1020, 1022, 1023, 1024, 1027, 1030, 1031
Dish Network 1029
Dishpro 1029
Durabrand 1018
Dynatech 1005
Echostar 1029
Electrohome 1003
Electrophonic 1003
Emerson 1003, 1004, 1005
Expressvu 1029
Fisher 1001
Fuji 1004
Funai 1005
Garrard 1005
Gateway 1017
GE 1002, 1004
GOI 1029
Goldstar 1000, 1003
Gradiente 1005
Harley Davidson 1005
Harman/Kardon 1000
Headquarter 1001
Hewlett Packard 1017
HNS 1016
Howard Computers 1017
HP 1017
HTS 1029
Hughes Network Systems 1016, 1020, 1022, 1023, 1024
Humax 1016, 1020
Hush 1017
iBUYPOWER 1017
Instant Replay 1004
JC Penney 1000, 1001, 1002, 1003, 1004
JCL 1004
JVC 1000, 1001, 1020, 1029
Kenwood 1000, 1001
Kodak 1003, 1004
LG 1003
Linksys 1017
Lloyd's 1005
LXI 1003
Magnavox 1004, 1018
Magnin 1003
Marantz 1000, 1001, 1004
Marta 1003
Media Center PC 1017
MEI 1004
Memorex 1001, 1002, 1003, 1004, 1005, 1018, 1019
MGN Technology 1002
Microsoft 1017
Mind 1017
Mitsubishi 1010
Motorola 1004
MTC 1002
Multitech 1002, 1005
NEC 1000, 1001
Nikko 1003
Niveus Media 1017
Noblex 1002
Northgate 1017
Olympus 1004
Optimus 1003
Orion 1014, 1019
Panasonic 1004, 1008
Philco 1004
Philips 1004, 1011, 1016, 1020, 1022, 1023, 1024, 1025
Philips Magnavox 1011
Pilot 1003
Proscan 1030
Pulsar 1018
Quarter 1001
Quartz 1001
Quasar 1004
Radio Shack 1003
Radio Shack/Realistic 1001, 1002, 1003, 1004, 1005
Radix 1003
Randex 1003
RCA 1002, 1004, 1007, 1016, 1020, 1022, 1030, 1031
Realistic 1001, 1002, 1003, 1004, 1005
ReplayTV 1026
Ricavision 1017
Runco 1018
Samsung 1002, 1016, 1022, 1024
Sanky 1018
Sansui 1014, 1019
Sanyo 1001, 1002
Sears 1001, 1003, 1004
Sharp 1012
Shogun 1002
Singer 1004
Sonic Blue 1026
Sony 1006, 1009, 1017, 1021
Stack 1017
STS 1004
Sylvania 1004, 1005
Symphonic 1005
Systemax 1017
Tagar Systems 1017
Tandy 1001
Tashiko 1003
Teac 1005
Technics 1004
Teknika 1003, 1004, 1005
Tivo 1016, 1020, 1021, 1022, 1025
TMK 1002
Toshiba 1015, 1017, 1028
Totevision 1002, 1003
Touch 1017
UltimateTV 1031
Unitech 1002
Vector Research 1000
Video Concepts 1000
Videosonic 1002
Viewsonic 1017
Voodoo 1017
Wards 1002, 1003, 1004, 1005
XR-1000 1004, 1005,
Yamaha 1000, 1001
Zenith 1013, 1018
ZT Group 1017

CD

Pioneer 5000, 5011, 5070
AKAI 5043
Asuka 5045
Denon 5019
Fisher 5048
Goldstar 5040
Hitachi 5042
Kenwood 5020, 5021, 5031
Luxman 5049
Marantz 5033
Onkyo 5017, 5018, 5030, 5050
Panasonic 5036
Philips 5022, 5032, 5044
RCA 5013, 5029
Roadstar 5052
Sharp 5051
Sony 5012, 5023, 5026, 5027, 5028, 5039
TEAC 5015, 5016, 5034, 5035, 5037
Technics 5041
Victor 5014
Yamaha 5024, 5025, 5038, 5046, 5047

Satellite Set Top Box

Pioneer 6097, 6098, 6325, 6328, 6329
ADB 6035, 6001
Akai 6102
Alba 6005, 6011, 6013
Allsat 6102
Alltech 6011
Amstrad 6033, 6030, 6044
Anttron 6013
Asat 6102
Austar 6000, 6045
Bell ExpressVu 6002, 6003
British Sky Broadcasting 6030
Canal 6105
Chaparral 6034
CNS 6001
Coolsat 6021
Crossdigital 6043
Digenius 6104
Digiwave 6053
DirecTV 6070, 6110, 6111, 6062, 6063, 6113, 6008, 6038, 6054, 6069, 6060, 6059, 6043, 6018, 6114, 6115, 6116, 6093
Dish Network System 6002, 6089, 6003, 6004
Dishpro 6002, 6089, 6004
Echostar 6002, 6089, 6036, 6005, 6003, 6004
Expressvu 6002, 6004
Fortec Star 6123, 6023
Fresat 6014
Funai 6070
GE 6111
General Instrument 6032
GOI 6002, 6004
Grundig 6007, 6030
Hirschmann 6033
Hisense 6020
Hitachi 6038, 6049
Houston 6002
HTS 6002, 6004
Hughes Network Systems 6113, 6038, 6054, 6114, 6115, 6116
Hyundai 6016
iLo 6020
Innova 6059
Jerrold 6032
Kathrein 6096
Lava 6053
LG 6047, 6018
Marantz 6102
McIntosh 6032
Mitsubishi 6038
Motorola 6032, 6042
NEC 6050, 6131
Netsat 6059
Next Level 6032
nfusion 6015
Nokia 6025, 6026, 6118, 6119, 6121
Pace 6035, 6005, 6030, 6031
Panarex 6016
Panasonic 6008, 6009, 6030
Pansat 6016, 6022
Philips 6002, 6113, 6038, 6054, 6060, 6059, 6102, 6103, 6030, 6114
Primestar 6032
Proscan 6110, 6111
Proton 6020
RadioShack 6002, 6111, 6032
Radix 6036
RCA 6002, 6110, 6111, 6113, 6109, 6061, 6114
Saba 6014
Sagem 6041, 6120
Samsung 6070, 6113, 6091, 6043, 6017, 6114, 6093
Sanyo 6046
Sat Cruiser 6015
Schwaiger 6066
Siemens 6007, 6036
SKY 6042, 6059, 6030, 6031
SM Electronic 6011
Smart 6051
Sonicview 6055, 6107
Sony 6062, 6063, 6030
Star Choice 6032
Star Trak 6032
TechniSat 6033
Thomson 6110, 6111, 6014
Tivo 6113, 6114, 6115, 6116
Toshiba 6038, 6054, 6039
TPS 6041
Triasat 6033
Ultrasat 6021
US Digital 6020
USDTV 6020
ViewSat 6048
Voom 6032
Zehnder 6101
Zenith 6042, 6069, 6037

Satellite Set Top Box (SAT/PVR Combination)

Bell ExpressVu 6002, 6003
DirecTV 6070, 6110, 6062, 6113, 6060, 6059, 6114, 6115, 6116
Dish Network System 6002, 6089
Dishpro 6002, 6089
Echostar 6002, 6089, 6003
Expressvu 6002
Hughes Network Systems 6113, 6114, 6115, 6116
JVC 6003
Motorola 6032
Philips 6113, 6114
Proscan 6110
Samsung 6114
Sonicview 6055, 6107
Sony 6062
Star Choice 6032
Tivo 6113, 6114, 6115, 6116

Cable Set Top Box

Pioneer 0297, 6028, 6029, 6095, 6099, 6325, 6328, 6329
ABC 6122
Accuphase 6122
Amino 6077, 6078
Auna 6082
BCC 6072
Bell & Howell 6122
Bright House 6074, 6029
Cable One 6074, 6029
Cablevision 6074, 6029
Charter 6074, 6029, 6058
Cisco 6029, 6028, 6083
Comcast 6074, 6029, 1982
Cox 6074, 6029
Digeo 6029, 6058
Director 6073
Emerson 6122
Fosgate 6072
General Instrument 6073, 6072, 6122
Homecast 6024
i3 Micro 6077
Insight 6074, 6073, 6029
Jebsee 6122
Jerrold 6073, 6072, 6122
Knology 6029
Macab 6040
Mediacom 6074, 6029
Memorex 6112
Motorola 6074, 6073, 6072, 6029, 6122, 6094
MTS 6094
Myrio 6077, 6078
Noos 6040
Pace 6074, 6029, 6028, 6106, 6083
Panasonic 6112, 6083
Paragon 6112
Penney 6112
Philips 6012
Pulsar 6112
Quasar 6112
Regal 6072
Rogers 6029
Runco 6112
Samsung 6095
Scientific Atlanta 6029, 6028, 6027, 6112
Sejin 6077
Shaw 6074
Starcom 6122
Stargate 6122
Suddenlink 6074, 6029
Supercable 6072
Time Warner 6074, 6029, 6058
Tivo 6076
Toshiba 6112
United Cable 6072, 6122
US Electronics 6072
Videoway 6112
Zenith 6112

Cable Set Top Box (Cable/PVR Combination)

Pioneer 6029, 6325, 6328, 6329
Amino 6078
Bright House 6074, 6029
Cable One 6074, 6029
Cablevision 6074, 6029
Charter 6074, 6029, 6058
Cisco 6029, 6083
Comcast 6074, 6029, 6083, 6076
Cox 6074, 6029
Digeo 6081, 6058
Homecast 6024
Insight 6074, 6029
Knology 6029
Mediacom 6074, 6029
Motorola 6074, 6081
Myrio 6078
Pace 6029
Panasonic 6083
Rogers 6029
Scientific Atlanta 6029
Shaw 6074
Suddenlink 6074, 6029
Supercable 6072
Time Warner 6074, 6029, 6058
Tivo 6076

CD-R

Pioneer 5001, 5053, 5071
Philips 5054
Yamaha 5055

Tuner

Pioneer 5060

Laser Disc Player

Pioneer 5002, 5003

Cassete Deck

Pioneer 5058, 5059

Digital Tape

Pioneer 5057

MD

Pioneer 5056

Network Audio Player

Pioneer 5063

Game

X-Box 2313

AV Receiver

Pioneer 5096 (ID 1), 5097 (ID 2), 5098 (ID 3), 5099 (ID 4),

To register your product, find the nearest authorized service location, to purchase replacement parts, operating instructions, or accessories, please go to one of following URLs :

Pour enregistrer votre produit, trouver le service après-vente agréé le plus proche et pour acheter des pièces de rechange, des modes d'emploi ou des accessoires, reportez-vous aux URL suivantes :

In the USA/Aux Etats-Unis
http://www.pioneerelectronics.com
In Canada/Aux Canada
http://www.pioneerelectronics.ca

S018_B1_EnFr

"Pioneer" is a trademark of Pioneer Corporation, and is used under license.

© 2015 Onkyo & Pioneer Corporation.
All rights reserved.

<U.S.A.>
18 PARK WAY, UPPER SADDLE RIVER, NEW JERSEY 07458, U.S.A.
Tel: 1-201-785-2600
<Germany>
Hanns-Martin-Schleyer-Straße 35, 47877 Willich, Germany
Tel: +49(0)2154 913222
<UK>
Anteros Building, Odyssey Business Park, West End Road, South Ruislip, Middlesex, HA4 6QQ United Kingdom
Tel: +44(0)208 836 3612
<France>
6, Avenue de Marais F - 95816 Argenteuil Cedex FRANCE
Tel :+33(0)969 368 050

<ARB7597-A>