6. ADJUSTMENTS

ADJUSTMENT PREPARATION

- R631, R632 are turned to the arrow direction to be perpendicular to the front panel.
- Switch S903 (Speaker Impedance Switch) must be set in the 8Ω position.

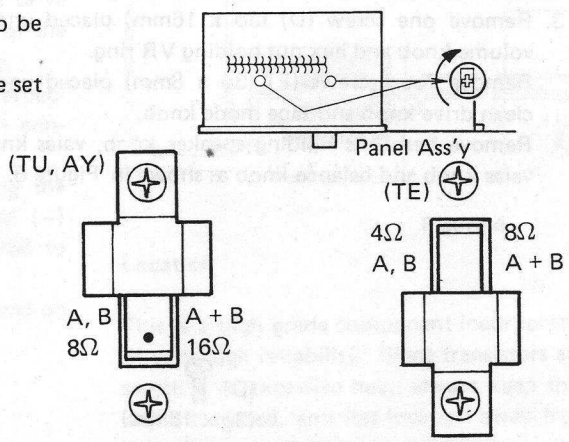

※ CAUTION

When using TE, exchange the bracket and change switch to the 8 ohm position.

1. Idle current adjustment can easily be done by setting the semi-fixed VR R631, 632 (470 ohm) to mechanical mid point VR as shown in Figure 11.
2. The idle current between TP and TP must be less than 30 mA when power has been on for 60 seconds.

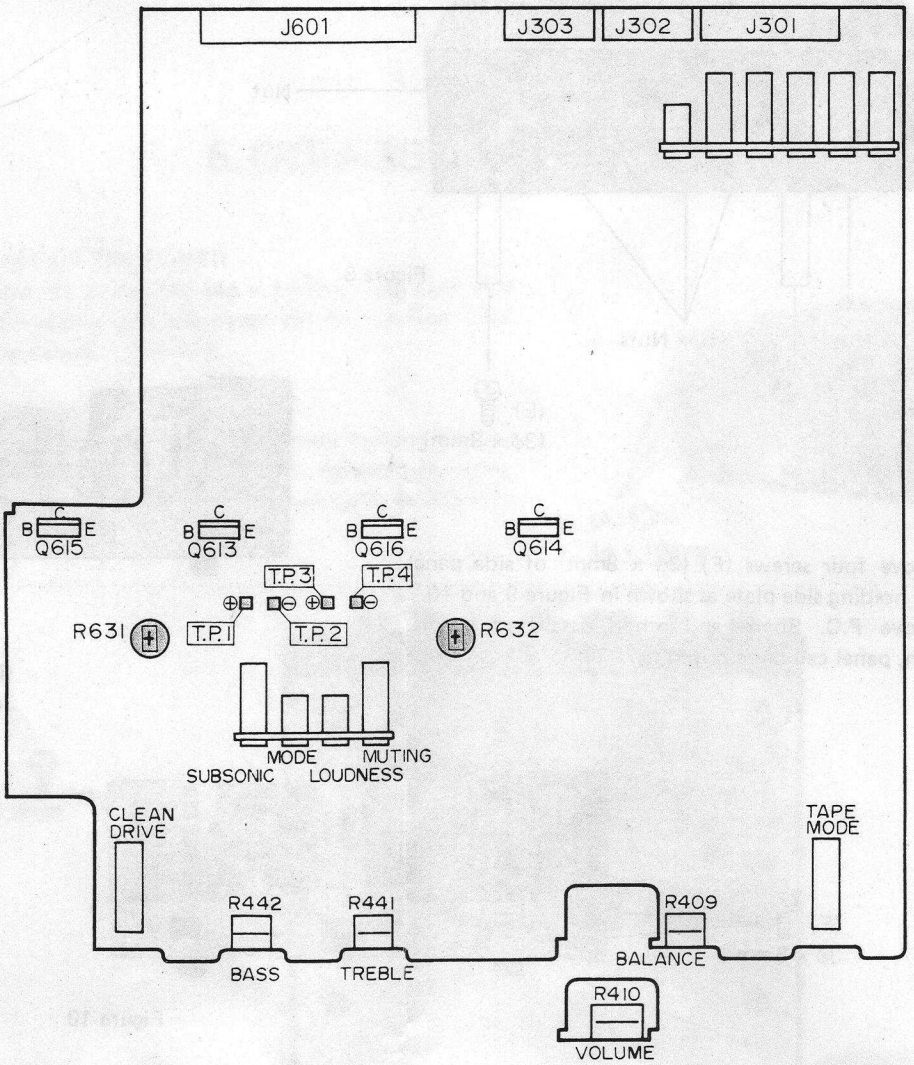

Figure 11

8. ELECTRICAL PARTS LO

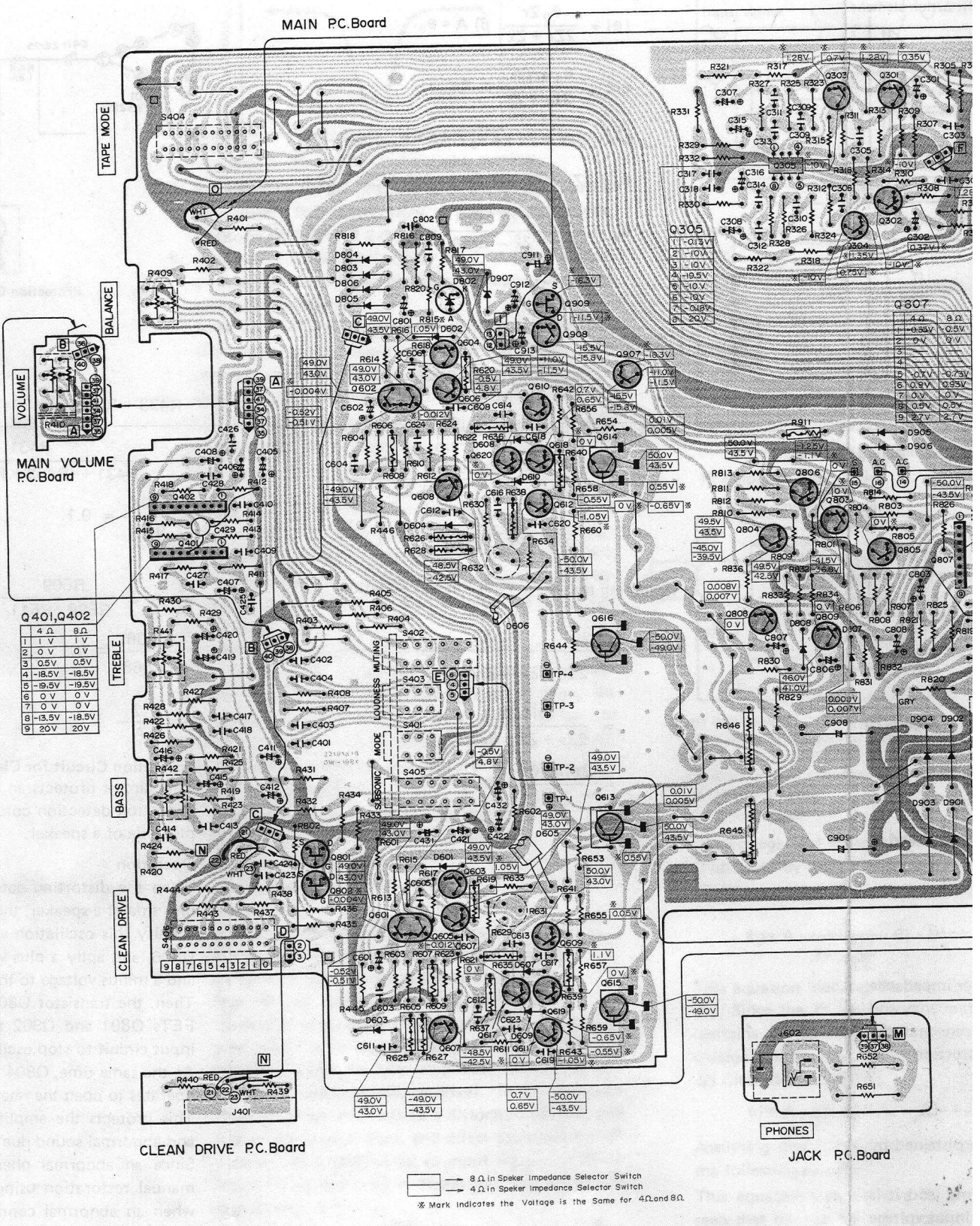

Figure 22

ARTS LOCATIONS

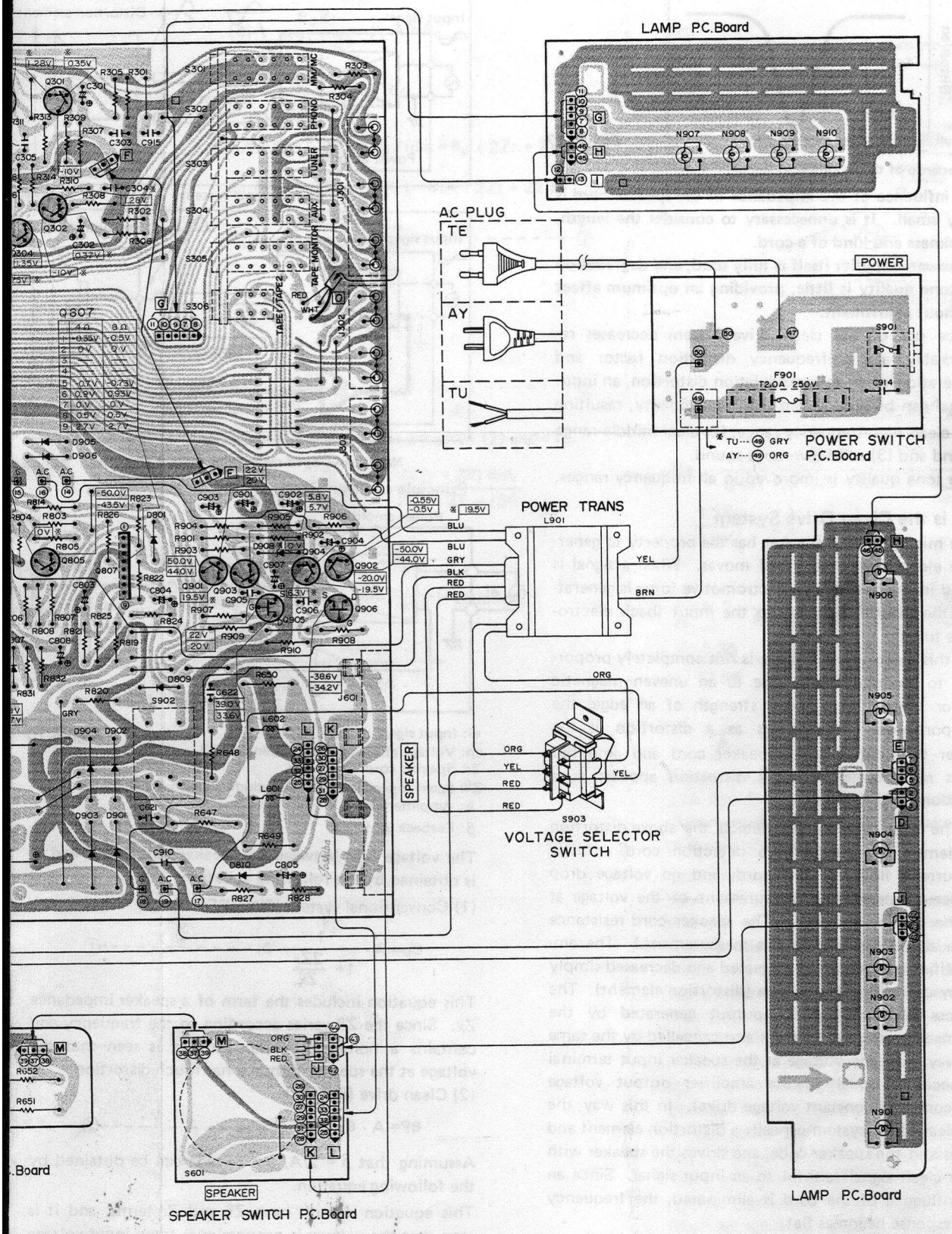

SB-66

ure 22

IEMATIC DIAGRAM

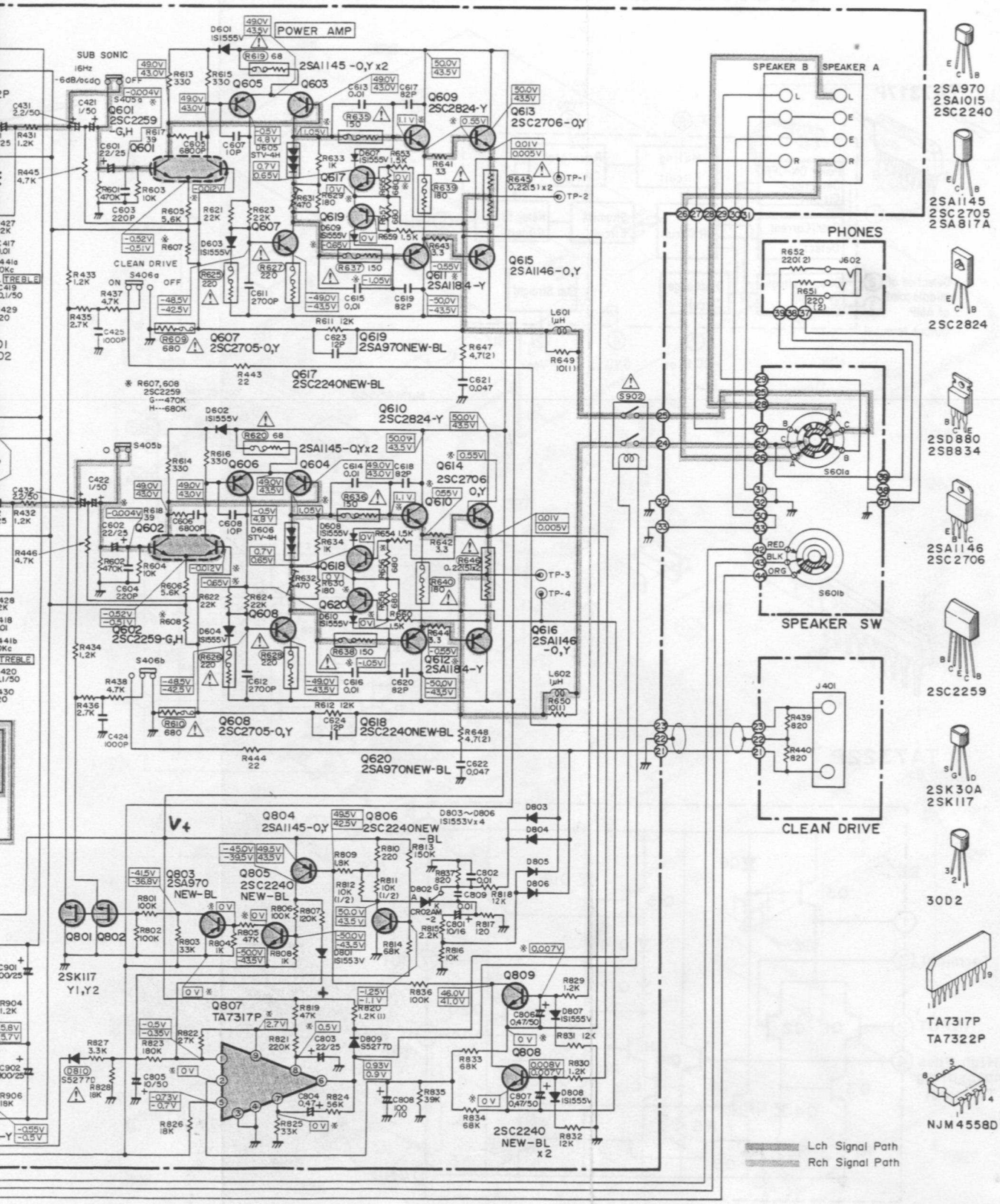

Figure 23

CAUTION:
The ⚠ mark, the symbol No. circled with rectangle in the schematic diagram and the shaded area in the parts list designate components which have special characteristics important for safety and should be replaced only with types identical to those in the original circuit or specified in the parts list.

SB66_Sch_B.JPG

9. SCHEMATIC DIA

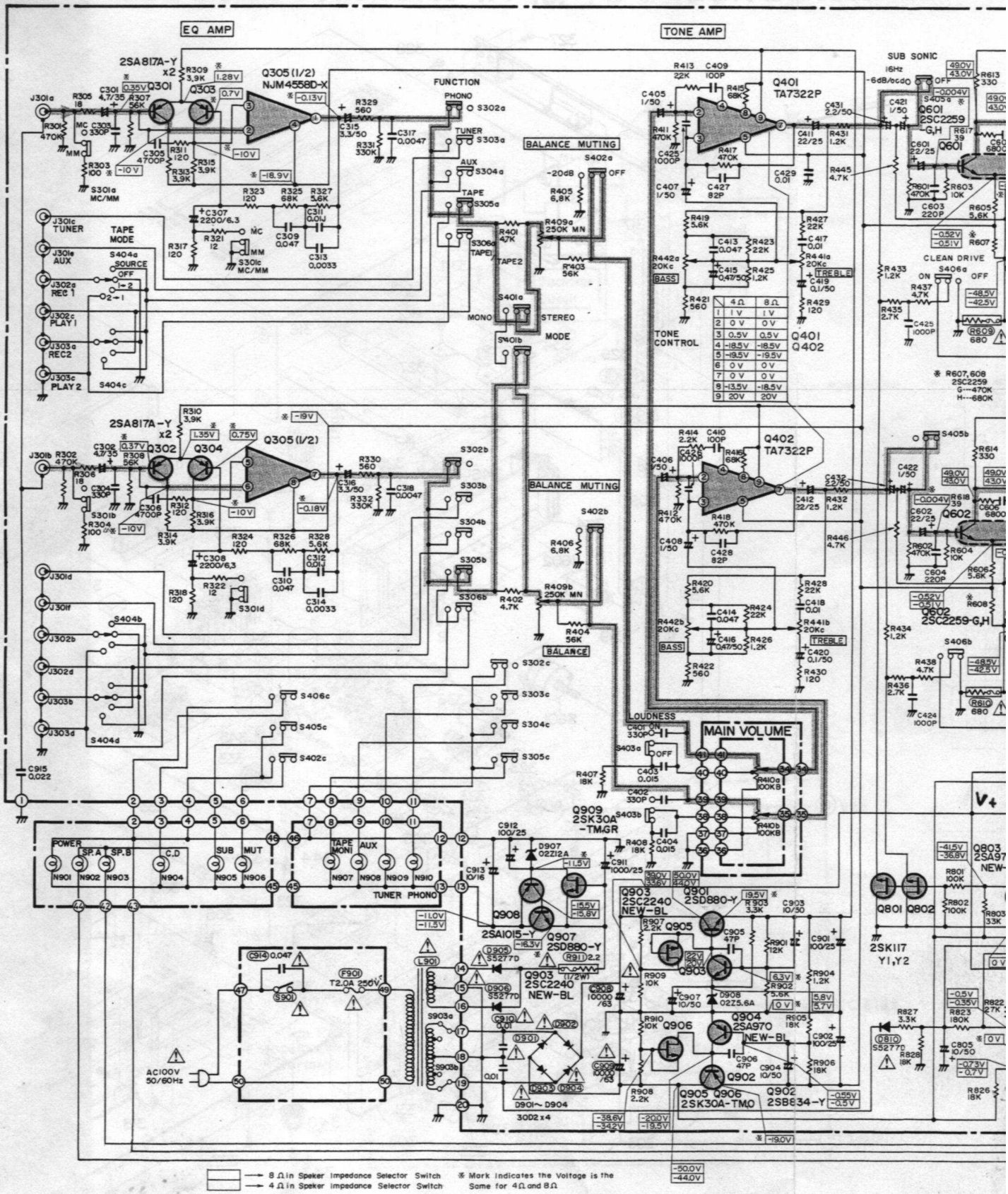

Figure 23

CAUT
The △
list de
with t